Greenways Multi-Use Trail: Lake Charleston to Warbler Ridge Conservation Area Connection Feasibility Study

Submitted by:

John C. Zeman, PE, SE
Katherine Mulvey, PE
p 217.352.7408 / jzeman@f-w.com
June 19, 2020

TABLE OF CONTENTS

Contact Information:
John C. Zeman, PE, SE
Katherine Mulvey, PE
p 217.352.7408 / jzeman@f-w.com
June 19, 2020

Table of Contents 1
List of Exhibits 1
1.0 Introduction 2
2.0 Conceptual Bridge Design 2
3.0 Conceptual Trail Design 3
4.0 Budgetary Project Cost Estimate 4
5.0 Conclusion 4

LIST OF EXHIBITS

A. Base Map

B. Structure Concept Plan

C. Budgetary Project Cost Estimate

D. Site Photographs

E. FEMA Flood Data

F. Abbreviated Existing Bridge Plans: IL Route 130 over Embarras River

G. U.S. Forest Service Standard Trail Plans: Prefabricated Steel Trail Bridge

H. U.S. Forest Service Standard Trail Plans: Boardwalks

I. U.S. Forest Service Standard Trail Plans: Sawn Timber Trail Bridge

J. Trail Design Guidelines – Excerpts from Appendix C of Wake County Consolidated Open Space Plan (Wake County, North Carolina)

1.0 INTRODUCTION

The objective of this report is to evaluate the feasibility and cost to design and construct a segment of the proposed Greenways Multi-Use Trail to connect Lake Charleston to the Warbler Ridge Conservation Area via a 10-foot wide trailway and a pedestrian bridge over the Embarras River. The pedestrian bridge would be an independent structure located just west of the Lake Charleston spillway and on property owned by the City of Charleston. This report includes a brief description and sketch of the conceptual design of the trailway segment and bridge, along with a budgetary estimate of the engineering services and construction costs required. The conceptual trailway and bridge designs are preliminary and subject to refinement in subsequent phases of design.

The proposed segment of trail is located south of Charleston, Illinois, where the Embarras River passes over the Lake Charleston spillway, continues under IL Route 130, and then under Bypass Road. Exhibit A is a Base Map which overlays aerial imagery, one-foot contours (only displaying five-foot contours for clarity), and property boundaries obtained from Coles County GIS. It is our understanding that the property along each side of the Embarras River located upstream (east) of IL Route 130 is owned by the City of Charleston. The IL Route 130 right-of-way (ROW) is owned by the State of Illinois and is managed by the Illinois Department of Transportation (IDOT). The property located southeast of the intersection of IL Route 130 and Bypass Road is currently private property. Bypass Road is a township road managed by Charleston Township and Coles County Highway Department.

Exhibit D contains photographs of the site along the proposed trail route, taken during a May 6, 2020 site visit.

The high-water information for the Embarras River was taken from the current FEMA Flood Insurance Study. Floodplain boundaries are shown in the attached exhibits for the 10-year and 100-year high water elevations. Note that the terms “10-year” and “100-year” indicate an annual probability of 10% and 1%, respectively. These high-water elevations are based on a 1976 hydrologic study and a 1985 hydraulic study, each by the U.S. Army Corps of Engineers. As noted in the Flood Insurance Study, all elevations reference the North American Vertical Datum from 1988 (NAVD 88). FEMA Flood Data is included as Exhibit E.

The adjacent IL Route 130 bridge over the Embarras River was constructed in 1981. Plans for this bridge were obtained from the Illinois Department of Transportation (IDOT), and the structural, roadway, and geotechnical information in these plans was used as a basis for the conceptual design work summarized here. Abbreviated Existing Bridge Plans are included as Exhibit F.

2.0 CONCEPTUAL BRIDGE DESIGN

Our team identified several alternate bridge locations and analyzed each location based on its construction cost, potential impacts to the Embarras River floodplain, connection with the existing terrain, proximity to area amenities, and traveling experience for the trail user. The proposed bridge location has a northern terminus located close to the Lake Charleston pavilion and parking lot, which provides direct access for trail users. With the spillway nearby, the trail user is immersed in the sights and sounds of the rushing water. The main span over the Embarras River is at an elevation above the 100-year flood elevation. When crossing a floodplain perpendicular to the direction of flow, new structures are to be built above the 100-year high water elevation to minimize impacts to the river’s flow. Building a structure parallel to the direction of flow and below the 100-year high water elevation in a floodplain is generally accepted by permitting agencies, such as the Illinois Department of Natural Resources (IDNR) Office of Water Resources, because the structure has less of an impact on the river’s flow. Once the bridge crosses to the south bank of the Embarras River, the structure turns westward to run parallel to the direction of river flow. This turning point creates an opportunity for a viewing platform where trail users can rest, meet, and enjoy the view. The remaining spans of the bridge are designed to ramp down at a maximum slope of 5% to existing ground level along the south bank of the Embarras River. A Structure Concept Plan is included as Exhibit B.

When crossing a floodplain perpendicular to the direction of flow, it is best to minimize the number of supports which would obstruct river flow. Combining this desire for longer spans over the floodplain with setting the bridge above the 100-year high water elevation led us to recommend using prefabricated steel truss spans supported by single-column, drilled concrete shaft foundations. Once the structure turns to run parallel to the direction of flow and ramps down, the height of each support decreases. Once the support height gets below 7 to 8 feet above ground level, it becomes feasible to construct timber boardwalk spans. Boardwalk spans are much shorter than steel truss spans, but they cost less to construct per square foot of bridge deck. In order to bring the trail down to existing ground level at the southwest terminus of the bridge, we propose constructing a ramp using concrete retaining walls filled with embankment and topped with trail pavement.

The U.S. Forest Service has a variety of Standard Trail Plan sheets available online, and we have included some in the exhibits to illustrate the structure types proposed here. Exhibit G illustrates details for the prefabricated steel truss spans. Exhibits H and I illustrate details which we could combine and modify for the boardwalk spans.

Typically, the prefabricated steel truss spans are designed and fabricated by specialty contractors, then delivered to site in large segments. A general contractor would erect and assemble the truss segments in place. IDOT maintains a list of prequalified pedestrian truss contractors. After contacting one of these prequalified contractors to obtain budgetary construction cost data, we learned that the 250-foot-long truss span over the main channel of the Embarras River would be more structurally efficient with a deck clear width of 12 feet. A narrower deck clear width for such a long span would have less lateral stability, requiring heavier structural steel members and a higher cost per square foot of deck. Therefore, we recommend a 12-foot clear width for the trail on the bridge. In their Bureau of Design and Environment Manual, IDOT requires a minimum clear width of 10 feet on pedestrian bridges with two-way traffic but recommends providing up to 14 feet of clear width as desirable for a better experience for trail users.

For the prefabricated steel truss spans, we recommend using weathering steel with an Ipe wood deck. Weathering steel is a special material that forms a sacrificial, protective coating of rust on the outside surface. This rusty coating is generally stable for the service life of the bridge, requiring no maintenance, as long it is not exposed to deicing salts. Furthermore, weathering steel is often used for its rustic appearance, which is typically preferred for natural areas. For the deck, Ipe wood is a hard and strong walnut that is naturally resistant to rot, abrasion, weather, and insects. The material costs for Ipe is notably more than other wood species, but the advantage is found in its durability. The wood material is also perceived as a more friendly material choice for natural recreational activities. For the boardwalk spans, we recommend using Ipe wood deck for durability and consistency with the rest of the bridge, but we recommend using conventional treated lumber, such as pine or fir, for the structural members. The shorter boardwalk spans will be easier to maintain when the lumber requires repairs or replacement.

3.0 CONCEPTUAL TRAIL DESIGN

The trailway at the north terminus of the pedestrian bridge is located above the 100-year floodplain and is sloped up to connect with the existing roadway. The trailway connection at the southwest terminus of the pedestrian bridge is mostly located within the 100-year floodplain. It meanders along the south bank of the river to a crossing under the IL Route 130 bridge at its southeastern-most span. From there, the proposed trailway crosses the floodplain on private property and then rises out of the floodplain via a switchback. Then the trailway crosses Bypass Road at grade to connect to the Warbler Ridge Conservation Area.

Based on the FEMA flood maps, the proposed trailway would flood frequently. As an example, along the bank of the Embarras River from the southwest terminus of the pedestrian bridge to IL Route 130, the ground is approximately at elevation 574. The FEMA flood maps indicate the 10-year and 100-year high water elevations at this location are 584 and 586, respectively. Therefore, it is recommended that the trail surface be built with

concrete pavement and concrete cutoff walls to protect it from high water velocities. Concrete surfaces are capable of withstanding the most powerful environmental forces. They hold up well again the erosive action of water, root intrusion, and subgrade deficiencies such as soft soils. Not only is it a strong material type, it has the lowest maintenance requirement when property installed. Exhibit J contains Trail Design Guidelines which illustrate conventional concepts related to selecting trail materials for different cases of flood exposure and flow velocities.

The width of the trail is presented as 10-foot pavement with 2-foot shoulders, following IDOT design policy in the Bureau of Design and Environmental Manual, to accommodate two-way traffic for trail users.

4.0 BUDGETARY PROJECT COST ESTIMATE

Exhibit C contains a budgetary project cost estimate for the proposed trail and pedestrian bridge. The budgetary project cost estimate is $3.81 million, consisting of $2.93 million for construction and $0.88 million for preliminary and construction engineering. The budgetary project cost estimate presented here was based on the conceptual design and is therefore subject to refinement in subsequent phases of design.

To estimate the cost of construction and engineering services for this project, we assumed that federal funds would be obtained from IDOT, through a partnership with the City of Charleston. Federal funds come with strict engineering requirements through planning, design, and construction. Using funds from other sources may reduce the scope of engineering services required.

While preparing the construction cost estimate, we compiled unit price data from IDOT bidding records for similar trail and bridge types and quotes received from suppliers.

The estimated fee for engineering services includes planning, design, and construction. During the planning phase for the trail and bridge over a waterway, we prepare a conceptual design of the trailway and bridge (included with this report); we survey property boundaries, topography, and floodplain; we conduct a hydrologic and hydraulic analysis of the floodway; we submit the preliminary trail and bridge design and hydraulic data to IDOT for their approval; and we apply for floodway permits from the US Army Corps of Engineering, IDNR Office of Water Resources, and the Illinois EPA. During the design phase, we prepare construction plans, specifications, and estimates. The plans and specifications would be reviewed by IDOT. During the construction phase, observations and documentation of the work by an engineer according to IDOT policy is required for approval of progress payments to the contractor and final acceptance of the project by IDOT.

5.0 CONCLUSION

Within this feasibility study, we presented a conceptual design for a multi-use trail connection from Lake Charleston to the Warbler Ridge Conservation Area at a budgetary project cost of $3.81 million.

The feasibility of this trail connection will depend on a partnership between Grand Prairie Friends and the City of Charleston, since the proposed pedestrian bridge and most of the proposed trailway would be on City property. The proposed trailway will also require acquisition of some or all of the private property located southeast of the intersection of IL Route 130 and Bypass Road, along with permanent easements to cross IDOT ROW and Charleston Township ROW, respectively. We recommend early coordination with these stakeholders, along with permitting agencies, especially the U.S. Army Corps of Engineers and IDNR Office of Water Resources.

The master plan for the Greenways Multi-Use Trail is to connect Charleston to Fox Ridge State Park by following the Embarras River. Accurate flood modeling of the Embarras River will be critical for making decisions about the location of and the materials to use for the trailway. Considering that the current flood model is over 35 years old, we recommend conducting a hydrologic and hydraulic study along the length of the proposed trail to update the FEMA flood maps before proceeding with design of the trailway.

Farnsworth GROUP
2211 WEST BRADLEY AVENUE
CHAMPAIGN, ILLINOIS 61821
(217) 352-7408 / Info@f-w.com

DESIGNED - KLM	REVISED -		
DRAWN - DRR	REVISED -		
CHECKED - JCZ	REVISED -		
DATE - 06/19/20	REVISED -		

GRAND PRAIRIE FRIENDS GREENWAYS MULTI-USE TRAIL

LAKE CHARLESTON TO WARBLER RIDGE CONSERVATION AREA BASE MAP

SCALE: | SHEET OF SHEETS | STA. TO STA.

F.A.U. RTE.	SECTION	COUNTY	TOTAL SHEETS	SHEET NO.
		COLES		
		CONTRACT NO.		
	ILLINOIS	FED. AID PROJECT		

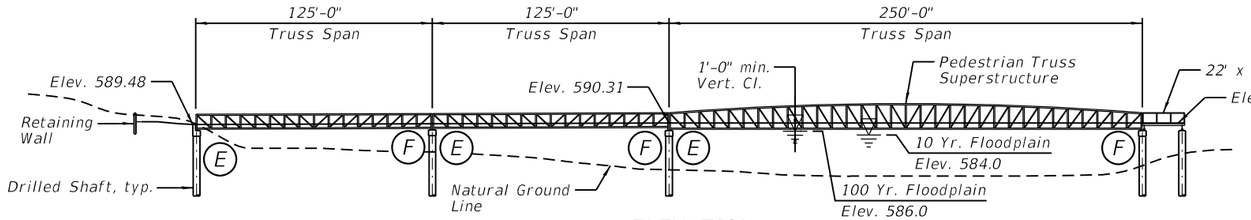

ELEVATION
(Looking East)

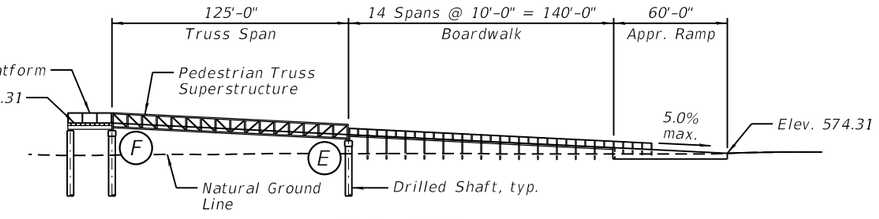

ELEVATION
(Looking South)

Levee Trailhead
Spillway
580
575
570
565
590
585
℄
125'-0" Truss Span
125'-0" Truss Span
250'-0" Truss Span
℄ Pedestrian Bridge
6'-0"
Retaining Wall
22' x 22' Platform
10 Year Floodplain Boundary Elev. 584
100 Year Floodplain Boundary Elev. 586
12'-0" Clear Width
6'-0"
125'-0" Truss Span
10'-0" Trail
2'-0" Shldr.
℄ Trail
Embarras River
Flow
14 Spans @ 10'-0" = 140'-0" Boardwalk
60'-0" Appr. Ramp
EX ROW
IL. Rte. 130
N

PLAN

Farnsworth GROUP 2211 WEST BRADLEY AVENUE CHAMPAIGN, ILLINOIS 61821 (217) 352-7408 / Info@f-w.com	DESIGNED - JCZ	REVISED -	
	DRAWN - DJM	REVISED -	
	CHECKED - JCZ	REVISED -	
	DATE - 06/19/20	REVISED -	

GRAND PRAIRIE FRIENDS GREENWAYS MULTI-USE TRAIL

LAKE CHARLESTON TO WARBLER RIDGE CONSERVATION AREA STRUCTURE CONCEPT PLAN

SCALE: | SHEET OF SHEETS | STA. TO STA.

F.A.U. RTE.	SECTION	COUNTY	TOTAL SHEETS	SHEET NO.
		COLES		
		CONTRACT NO.		
	ILLINOIS FED. AID PROJECT			

BUDGETARY PROJECT COST ESTIMATE

BUDGETARY CONSTRUCTION COST ESTIMATE

Multi-Use Trail - Concrete Surface	1801' total length	$ 418,000.00
Truss Spans	Four spans, 625' total length	$ 1,713,000.00
Platform	22' x 22' deck area	$ 195,000.00
Boardwalk Spans	Fourteen spans, 140' total length	$ 265,000.00
Approach Ramp	60' total length	$ 73,000.00
Contingency (±10%)		$ 266,000.00
Budgetary Construction Cost		$ 2,930,000.00

BUDGETARY FEE ESTIMATE FOR ENGINEERING SERVICES

Preliminary Engineering Fee (±15% of Total Construction Cost)	$ 440,000.00
Construction Engineering Fee (±15% of Total Construction Cost)	$ 440,000.00
Budgetary Engineering Fee	$ 880,000.00

BUDGETARY PROJECT COST ESTIMATE

Construction Cost	$ 2,930,000.00
Engineering Fee	$ 880,000.00
Budgetary Project Cost	$ 3,810,000.00

Notes:

1.) The Budgetary Project Cost Estimate is intended for budgetary planning purposes only, and is in units of 2020 dollars.

2.) The Engineering Fee Estimate is based on the assumption that this project will use federal funds from the Illinois Department of Transportation, through a partnership between Grand Prairie Friends and the City of Charlston. Federal funds come with strict engineering requirements through planning, design, and construction. Using funds from other sources may reduce the scope of engineering services required.

Location: North side of spillway.
Viewpoint: Looking south at proposed bridge location over Embarras River.

Location: North side of spillway.
Viewpoint: Looking east at existing parking lot, pavilion, and playground.

Location: North side of Embarras River at proposed bridge abutment.
Viewpoint: Looking south.

Location: North side of Embarras River at proposed bridge abutment.
Viewpoint: Looking west.

Location: North side of Embarras River at proposed bridge abutment.
Viewpoint: Looking east.

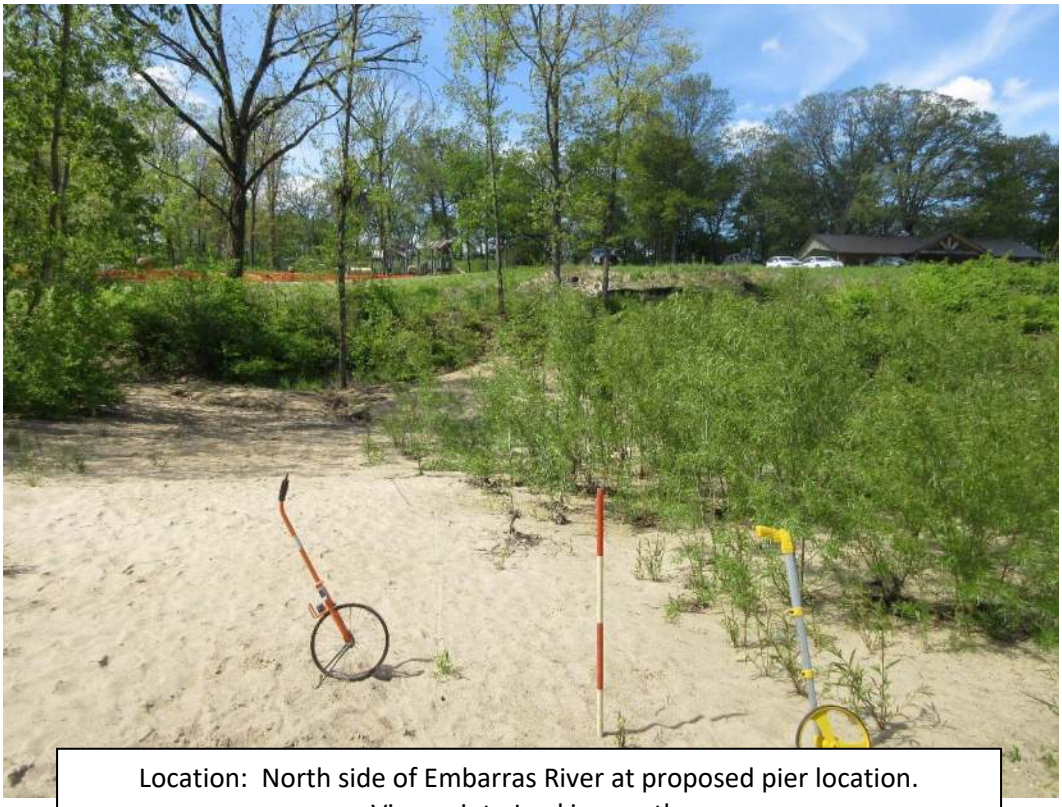

Location: North side of Embarras River at proposed pier location.
Viewpoint: Looking north.

Location: North side of Embarras River at proposed pier location.
Viewpoint: Looking south.

Location: North side of Embarras River at proposed pier location.
Viewpoint: Looking north.

Location: North side of Embarras River at proposed pier location.
Viewpoint: Looking south.

Location: North side of Embarras River at proposed pier location.
Viewpoint: Looking east at the spillway.

Location: South side of Embarras River at proposed pier location.
Viewpoint: Looking north.

Location: South side of Embarras River at proposed pier location.
Viewpoint: Looking north.

Location: South side of Embarras River at proposed pier location.
Viewpoint: Looking north.

Location: South side of Embarras River at proposed pier location.
Viewpoint: Looking west towards proposed boardwalk and trail.

Location: Floodplain along south side of Embarras River.
Viewpoint: Looking west along proposed trail alignment.

Location: Under IL Route 130 bridge.
Viewpoint: Looking southwest along proposed trail alignment under bridge.

Location: Under IL Route 130 bridge.
Viewpoint: Looking northeast along proposed trail alignment under bridge.

Location: Low lying area between IL Route 130 bridge and Eads property.
Viewpoint: Looking south along proposed trail alignment.

Location: Low lying area between IL Route 130 bridge and Eads property.
Viewpoint: Looking north along proposed trail alignment & existing bridge.

Location: Low lying area between IL Route 130 bridge and Eads property.
Viewpoint: Looking south along proposed trail alignment & existing berm.

Location: Base of berm at Eads property.
Viewpoint: Looking east along proposed trail alignment and switchback.

Location: Top of berm at Eads property.
Viewpoint: Looking north along proposed trail alignment.

Location: Top of berm at Eads property.
Viewpoint: Looking south along proposed trail alignment.

Location: Bypass Road near a future trail crossing.
Viewpoint: Looking north.

National Flood Hazard Layer FIRMette

FEMA

39°27'40.83"N

88°8'56.55"W

88°8'19.09"W

39°27'13.05"N

Feet 1:6,000

0 250 500 1,000 1,500 2,000

Legend

SEE FIS REPORT FOR DETAILED LEGEND AND INDEX MAP FOR FIRM PANEL LAYOUT

SPECIAL FLOOD HAZARD AREAS
- Without Base Flood Elevation (BFE) *Zone A, V, A99*
- With BFE or Depth *Zone AE, AO, AH, VE, AR*
- Regulatory Floodway

OTHER AREAS OF FLOOD HAZARD
- 0.2% Annual Chance Flood Hazard, Areas of 1% annual chance flood with average depth less than one foot or with drainage areas of less than one square mile *Zone X*
- Future Conditions 1% Annual Chance Flood Hazard *Zone X*
- Area with Reduced Flood Risk due to Levee. See Notes. *Zone X*
- Area with Flood Risk due to Levee *Zone D*

OTHER AREAS
- NO SCREEN Area of Minimal Flood Hazard *Zone X*
- Effective LOMRs
- Area of Undetermined Flood Hazard *Zone D*

GENERAL STRUCTURES
- Channel, Culvert, or Storm Sewer
- Levee, Dike, or Floodwall

OTHER FEATURES
- B 20.2 / 17.5 Cross Sections with 1% Annual Chance Water Surface Elevation
- 8 Coastal Transect
- 513 Base Flood Elevation Line (BFE)
- Limit of Study
- Jurisdiction Boundary
- Coastal Transect Baseline
- Profile Baseline
- Hydrographic Feature

MAP PANELS
- Digital Data Available
- No Digital Data Available
- Unmapped

N

The pin displayed on the map is an approximate point selected by the user and does not represent an authoritative property location.

This map complies with FEMA's standards for the use of digital flood maps if it is not void as described below. The basemap shown complies with FEMA's basemap accuracy standards

The flood hazard information is derived directly from the authoritative NFHL web services provided by FEMA. This map was exported on 2/27/2020 at 12:21:48 PM and does not reflect changes or amendments subsequent to this date and time. The NFHL and effective information may change or become superseded by new data over time.

This map image is void if the one or more of the following map elements do not appear: basemap imagery, flood zone labels, legend, scale bar, map creation date, community identifiers, FIRM panel number, and FIRM effective date. Map images for unmapped and unmodernized areas cannot be used for regulatory purposes.

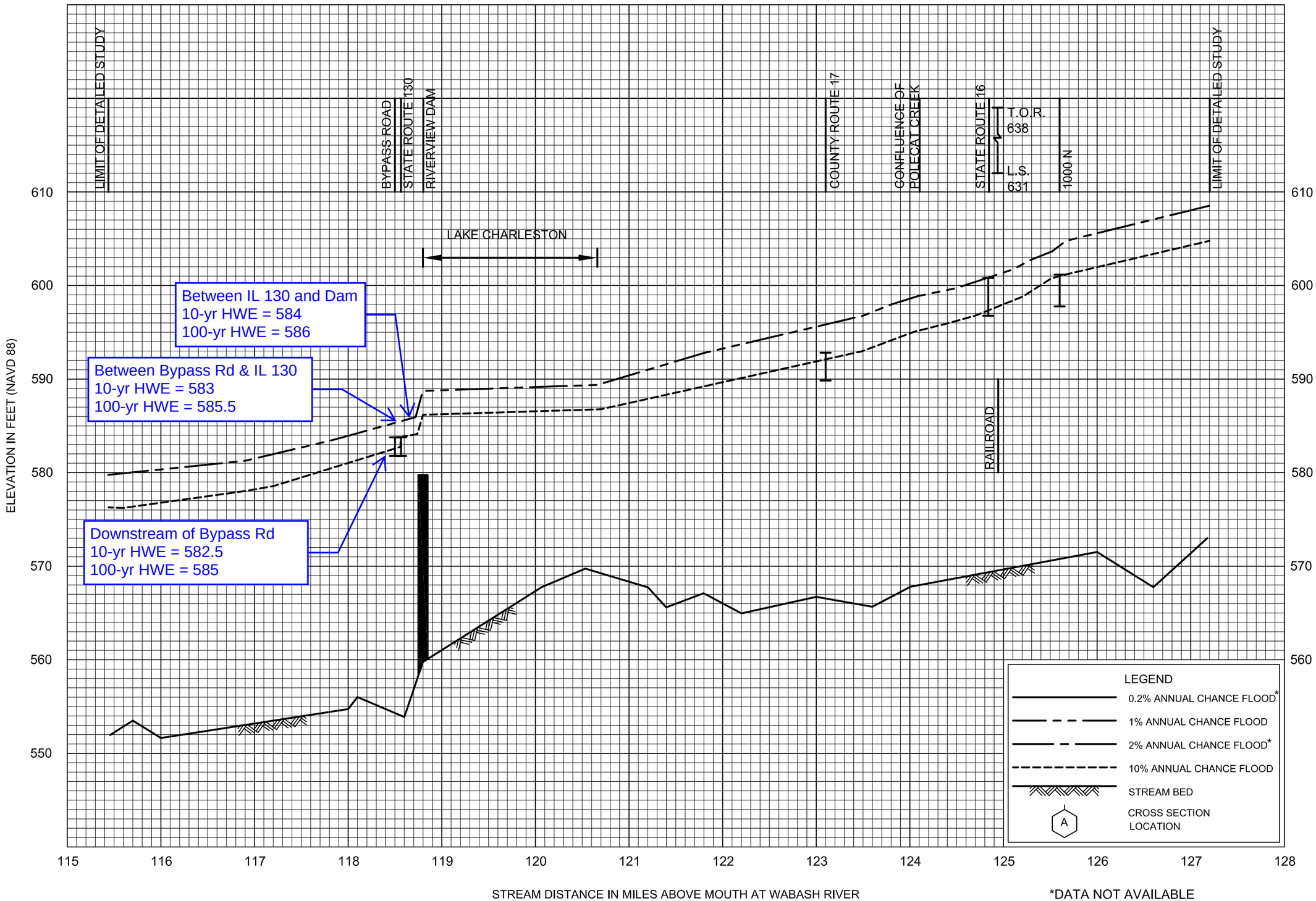

*DATA NOT AVAILABLE

FLOOD PROFILES

EMBARRAS RIVER

FEDERAL EMERGENCY MANAGEMENT AGENCY

COLES COUNTY, IL

AND INCORPORATED AREAS

02P

B.M. #12: Chiseled a on Hubguard of West Approach Span, Embarrass River Bridge, Elev. 583.92

STATE OF ILLINOIS
DEPARTMENT OF TRANSPORTATION

ROUTE NO.	SECTION	COUNTY	TOTAL SHEETS	SHEET NO.
S.B.I. F.A. 116	III BR	COLES	137	46
FED. ROAD DIST. NO. 7		ILLINOIS	FED. AID PROJECT	

SHEET NO. 1 OF 17 SHEETS

The existing bridge (No. 015-0042) was constructed in 1928 as S.B.I. 130. The bridge is a 200 foot long truss with two 30 foot long R.C. Deck Girder end spans. Existing piers are solid concrete type; existing abutments are spill-thru type. The existing horizontal clearance is 21.5'. Bridge is to be removed; no salvage.

Note: Elevations shown here are assumed to be on NGVD 29 vertical datum. Elevations converted to NAVD 88 are added in red text. JCZ 4/16/20

GENERAL NOTES

See Proposal for Boring Data.

Reinforcement bars shall conform to the requirements of AASHTO M-31 or M-53 Grade 60.

The contractor shall drive 2 Steel "H" test piles (HP 10x42) in a permanent location, one at the West Abutment and one at Pier 3 as directed by the Engineer before ordering the remainder of piles.

Layout of stone riprap may be varied to suit ground conditions in the field. The embankment configuration shall be the minimum embankment that must be constructed prior to construction of the Abutment.

A Calcium Nitrite Corrosion Inhibiter, as covered in the Special Provisions, shall be used in the Class X Concrete for parapet.

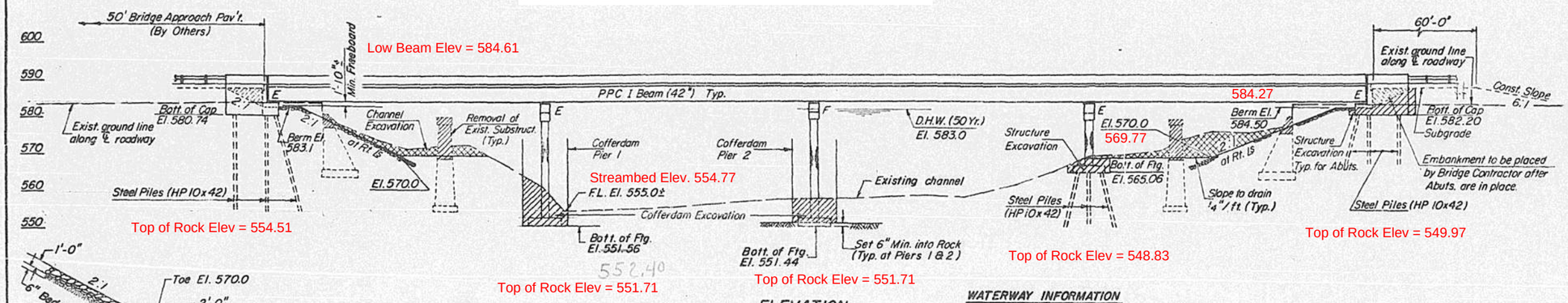

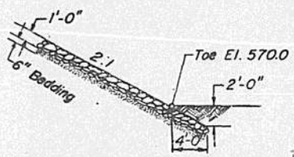

STONE RIPRAP TOE DETAIL

ELEVATION

(Looking Upstream)
(Looking Northeast)

STATION 180+99.83
BUILT 198 BY
STATE OF ILLINOIS
F.A.P. RTE. 116 SEC. 111 BR
F.A. PROJ. BR-F-FR-116(15)
LOADING HS-20
STR. NO. 015-0067

NAME PLATE
Std. 2113

WATERWAY INFORMATION

Drainage Area	785.6 Sq. Mi.
Design H.W. El. (50 Yr.)	583.0
Design Discharge, Q50	20,820 c.f.s.
Existing Opening	4,098 Sq. Ft.
Required Opening	4,450 Sq. Ft.
Created Head (50 Yr.)	0.7 ft.
Design H.W. El. (100 Yr.)	583.9
Design Discharge, Q100	23,250 c.f.s.
Created Head (100 Yr.)	0.8 ft.

APPROVED
FOR STRUCTURAL ADEQUACY ONLY
Carl E. Thurman

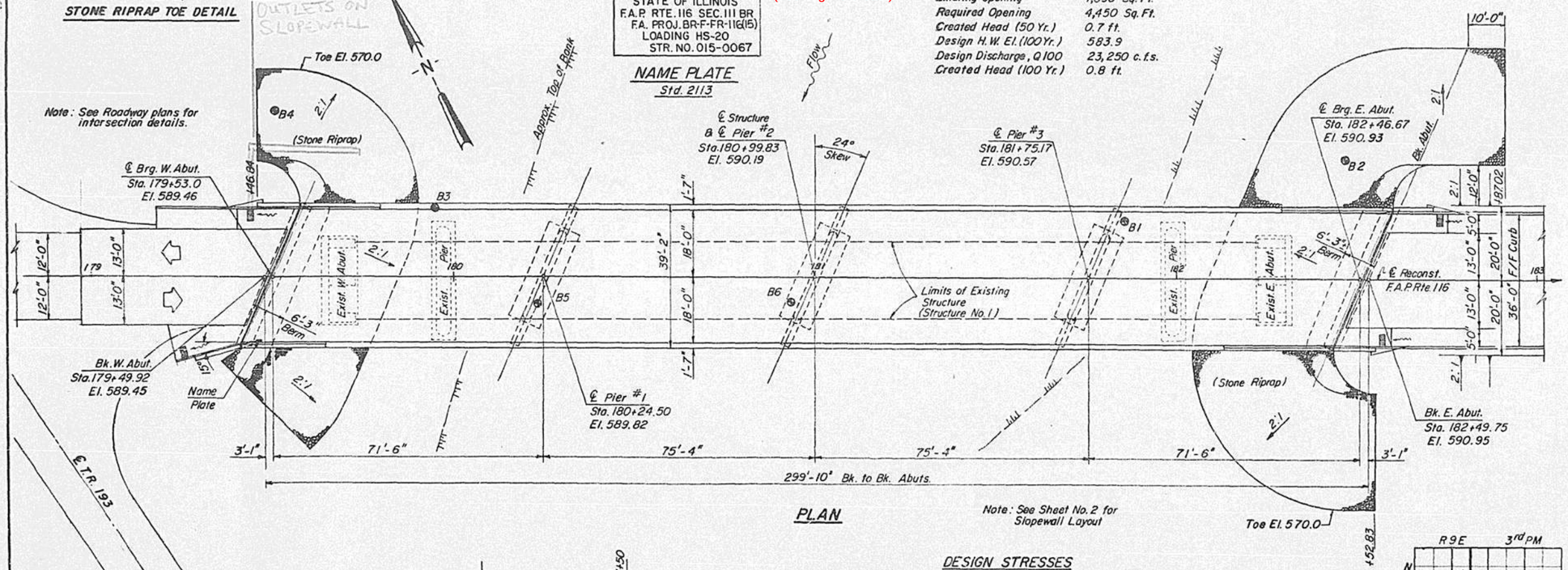

PLAN

Note: See Sheet No. 2 for Slopewall Layout

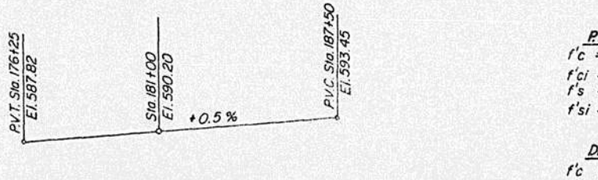

PROFILE GRADE
Applies at ℄ Roadway

DESIGN STRESSES

P.P.C. I-BEAMS

f'c = 6,000 p.s.i.
f'ci = 4,000 p.s.i.
f's = 270,000 p.s.i. (2" φ Strands)
f'si = 189,000 p.s.i. (2" φ Strands)

DECK SLAB

f'c = 3,500 p.s.i.
fy = 60,000 p.s.i. (Reinf.)

FIELD UNITS

fc = 1,400 p.s.i. (Substructure)
fs = 24,000 p.s.i. (Reinf. Grade 60, Substructure)
vc = 56.2 p.s.i.
n = 9
Allowable F.W.S. 25#/Sq. Ft.
Design Loading: HS 20-44
Design Specifications: 1977 AASHTO & 1978 & 1979 Interims as Applicable
SERVICE LOAD DESIGN - Field Units except the deck slab.

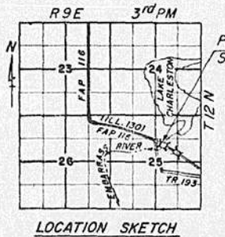

LOCATION SKETCH

TOTAL BILL OF MATERIAL

ITEM	UNIT	SUPER.	SUB.	TOTAL
Structure Excavation	Cu. Yds.		240	240
Class X Concrete	Cu. Yds.	381.1	362.3	743.4
Reinforcement Bars	Lbs.	36,630	32,250	68,880
Reinforcement Bars (Epoxy Coated)	Lbs.	51,160		51,160
Protective Coat	Sq. Yds.	1450		1450
Structural Steel (F & E.)	Lbs.	6330		6330
Furnishing & Erecting P.P.C. I-Bms. (42")	Lin. Ft.	1764		1764
Steel Piles (HP 10 x 42) (Furnishing)	Lin. Ft.		871	871
Test Piles Steel (HP 10 x 42)	Each		2	2
Neoprene Expansion Joint (2")	Lin. Ft.	84		84
Name Plate	Each	1		1
Stone Riprap	Sq. Yds.		1135	1135
Cofferdam Excavation	Cu. Yds.		176	176
* Removal of Existing Structures (No. 1)	Each	1		1
Elastomeric Brg. Assembly Type I	Each	36		36
Cofferdam Pier 1 & Cofferdam Pier 2	Each		1 & 1	1 & 1
Driving Steel Piles	Lin. Ft.		871	871
Rock Excavation for Structures	Cu. Yds.		18	18
* Channel Excavation	Cu. Yds.		1043	1043

* See Special Provisions

COFFERDAM PIER 2 ADJ EACH 0 0

DESIGNED	G.E.P.
CHECKED	D.V.K.
DRAWN	J.D.T.
CHECKED	E.F.V.

3/26/80

STATE OF ILLINOIS GREGORY S. POLUS 081-3512 REGISTERED STRUCTURAL ENGINEER

Gregory S. Polus 081-3512

GENERAL PLAN & ELEVATION
F.A.P. RTE. 116 OVER EMBARRASS RIVER
SECTION III BR
COLES COUNTY
STA. 180+99.83

Note: Elevations shown here are from 1995 survey. Assumed to be on NGVD 29 vertical datum. Elevations converted to NAVD 88 are added in red text.
JCZ 4/16/20

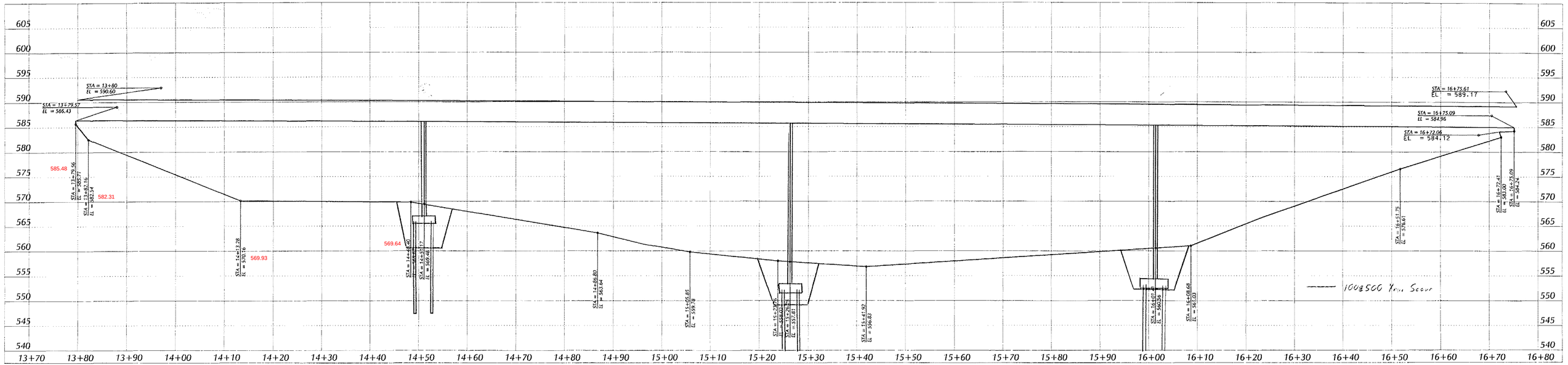

LOOKING DOWNSTREAM (LOOKING SOUTHWEST)

								HANDRAIL					END POST		DECK		
STRUCTURE NUMBER	TRAIL NO.	BRIDGE LOCATION	BRIDGE LENGTH ℄–℄ BRNG	BRIDGE SPAN OUT–TO–OUT	BRIDGE CLEAR WIDTH	PEDESTRIAN LOAD	GROUND SNOW LOAD	ADA REQUIRED	HEIGHT	RUB RAIL SPECIES	RUB RAIL SIZE	TREATMENT	VERTICAL	DIAGONAL	SPECIES	SIZE	TREATMENT TYPE

DECK TYPE: ST = STEEL THROUGH TRUSS, FRP = FIBER REINFORCED POLYMER THROUGH TRUSS, CONC = CONCRETE VOIDED SLAB

	RUNNING PLANK				ABUTMENT				BACKWALL						APPROACHES						
STRUCTURE NUMBER	SPECIES	SIZE	WIDTH	TREATMENT TYPE	TYPE	SIZE	TREATMENT		TYPE	SPECIES	SIZE	WIDTH	HEIGHT	TREATMENT	LENGTH		WIDTH	MATERIAL TYPE	MATERIAL DEPTH	GEO–SYNTHETIC TYPE	COMMENTS
							YES	NO							NEAR	FAR					
X																					
X																					
X																					
X																					
X																					
X																					

ABUTMENT MATERIAL TYPE: SS = SOLID SAWN, GLU = GLULAM, CONC = CONCRETE

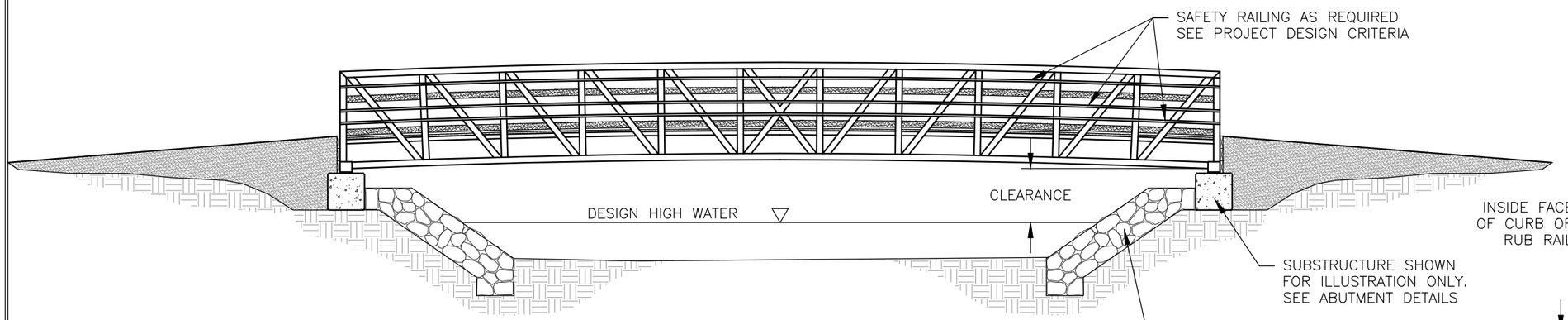

ELEVATION

– MAXIMUM GRADE ℄ BEARING TO ℄ BEARING = 5%

– RUNNING PLANKS AND DECK PLANKS NOT SHOWN FOR CLARITY

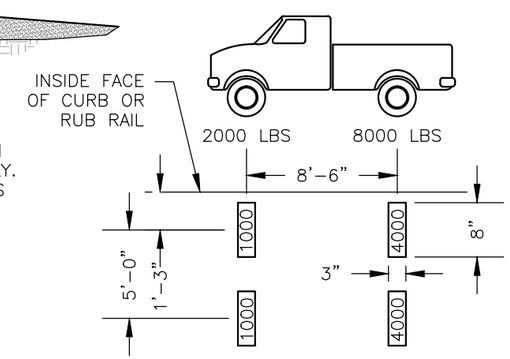

H–5 VEHICLE LOADING DIAGRAM

SHEET 1 OF 3

U.S. DEPARTMENT OF AGRICULTURE
FOREST SERVICE

STANDARD TRAIL PLAN

PROJECT NAME & LOCATION

DRAWING NAME
PREFABRICATED STEEL TRAIL BRIDGE

SECTION
964 - PREFABRICATED TRAIL BRIDGE

TYPICAL ID
PRE

REVISION DATE

NOT TO SCALE

DRAWING NO.
STD_964-10-01

SHEET
OF

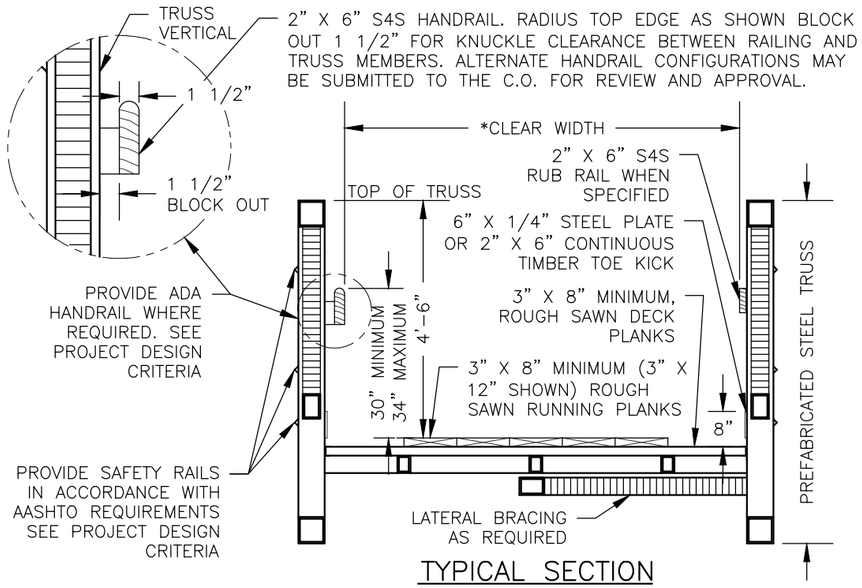

TYPICAL SECTION

*INSIDE FACE TO INSIDE FACE(RUB RAILS AND RAIL)

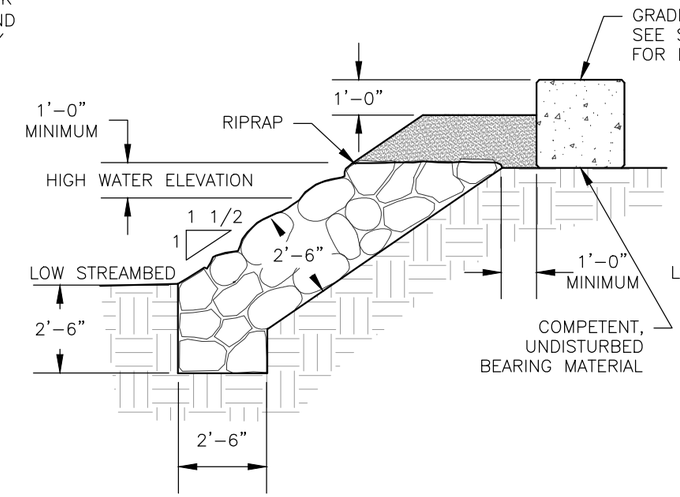

GRADE BEAM FOUNDATION
RIPRAP ARMORING

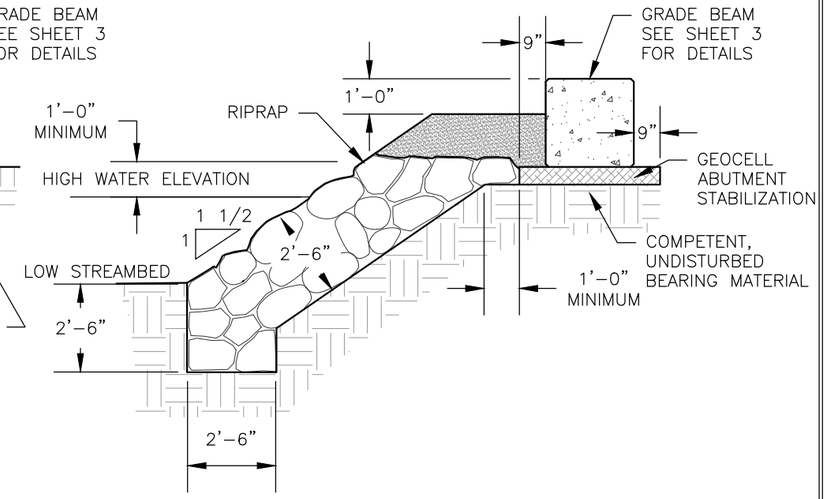

GRADE BEAM FOUNDATION
RIPRAP ARMORING W/GEOCELL

GENERAL NOTES:

SPECIFICATIONS: MATERIALS AND CONSTRUCTION OF THIS STRUCTURE SHALL BE IN ACCORDANCE WITH THE STANDARD SPECIFICATION FOR CONSTRUCTION OF ROADS AND BRIDGES ON FEDERAL HIGHWAY PROJECTS (FP-03) AND STANDARD SPECIFICATIONS FOR CONSTRUCTION OF TRAILS AND TRAIL BRIDGES ON FEDERAL PROJECTS,

PREFABRICATED STEEL BRIDGE SUPERSTRUCTURE: PREFABRICATED STEEL SUPERSTRUCTURE DESIGN MUST BE A TRUSS CONFIGURATION SIMILAR TO THAT SHOWN ON THE DRAWINGS. THE BRIDGE SHALL MAINTAIN THE CLEARANCES ABOVE HIGH WATER INDICATED ON THE BRIDGE ELEVATION. THE BRIDGE CROSS-SECTION SHALL BE DETERMINED BY THE CONTRACTOR BUT SHALL PROVIDE THE WIDTH AND RAILING DETAILS INDICATED ON THE BRIDGE TYPICAL SECTION. THE CONTRACTOR SHALL DETERMINE TRUSS HEIGHT AND THE LOCATION OF THE DECK WITH RESPECT TO THE TOP AND BOTTOM CHORDS (U FRAME VS. H FRAME). OVERHEAD LATERAL BRACING IS UNACCEPTABLE. ALL RELATED DETAILS SUCH AS PROFILE, ABUTMENT DETAILS, BEARINGS, AND TIMBER DECKING SHALL BE THE RESPONSIBILITY OF THE CONTRACTOR TO FINALIZE AND CONSTRUCT.

THE PREFABRICATED STEEL BRIDGE SUPERSTRUCTURE, ABUTMENT FOUNDATIONS, AND ASSOCIATED DETAILS INCLUDING TIMBER COMPONENTS SHALL BE DESIGNED UNDER THE DIRECTION OF A REGISTERED PROFESSIONAL ENGINEER. THE COMPLETED DESIGN, DRAWINGS, AND SPECIFICATION PACKAGE SHALL BE SUBMITTED TO THE CONTRACTING OFFICER FOR REVIEW AND APPROVAL.

DESIGN: THE DESIGN OF ALL PREFABRICATED STEEL BRIDGE SUPERSTRUCTURE ELEMENTS SHALL COMPLY WITH THE AASHTO LRFD GUIDE SPECIFICATION FOR DESIGN OF PEDESTRIAN BRIDGES, CURRENT EDITION AND AASHTO LRFD BRIDGE DESIGN SPECIFICATIONS, CURRENT EDITION. PROVIDE CAMBER FOR 100% OF THE FULL DEAD LOAD DEFLECTION PLUS 1% OF BRIDGE SPAN. SUBMIT SHOP DRAWINGS AND CALCULATIONS FOR APPROVAL AND MUST BE APPROVED BEFORE FABRICATION.

MATERIALS: USE STEEL SHAPES, PLATES AND BARS OF WEATHERING STEEL CONFORMING TO AASHTO M270, GRADE 50W (ASTM A588 OR ASTM A242) OR ASTM A847 FOR SQUARE AND RECTANGULAR TUBING. MINIMUM STEEL THICKNESS SHALL BE AS SPECIFIED IN THE GUIDE SPECIFICATIONS FOR DESIGN OF PEDESTRIAN BRIDGES. USE HIGH STRENGTH BOLTS CONFORMING TO AASHTO M164, (ASTM A325), TYP 3, UNLESS NOTED OTHERWISE. USE MALLEABLE IRON WASHERS AGAINST WOOD.

STEEL FABRICATION: THE PREFABRICATED STEEL BRIDGE SUPERSTRUCTURE SHALL BE FABRICATED BY AN AISC CERTIFIED PLANT – SIMPLE STEEL BRIDGES OR COMPLEX STEEL STRUCTURES. WHEN STRUCTURAL STEEL IS TO BE WELDED, THE WELDING PROCEDURE SHALL BE IN ACCORDANCE WITH AWS D1.5 AND SHALL BE SUITABLE FOR THE GRADE OF STEEL AND INTENDED USE OR SERVICE.

ERECTION PLAN: THE CONTRACTOR SHALL SUBMIT AN ERECTION PLAN FOR THE PREFABRICATED STEEL BRIDGE SUPERSTRUCTURE TO THE C.O. FOR APPROVAL 14 DAYS BEFORE ERECTION IS SCHEDULED. IF ALLOWED UNDER THE PROJECT DESIGN CRITERIA, TEMPORARY IN-STREAM SUPPORT BENTS MAY BE USED FOR THE ERECTION OF THE PREFABRICATED STEEL TRUSS BRIDGE. THE IN-STREAM BENTS SHALL BE CRIBBING, SILLS, CONCRETE BLOCKS OR OTHER SUPPORTS AND SHALL BE PLACED WITH MINIMAL DISTURBANCE WITHIN THE STREAM. ALL MATERIALS TO CONSTRUCT THE TEMPORARY IN-STREAM BENTS SHALL BE REMOVED. THE SUBMITTALS SHALL INCLUDE DRAWINGS INDICATING TEMPORARY BENT LOCATIONS AND DETAILS ALSO INCLUDED, THE CONTRACTOR SHALL INDICATE THE EQUIPMENT AND METHODS PROPOSED TO INSTALL AND REMOVE THE TEMPORARY BENTS AND ERECT THE NEW PREFABRICATED STEEL TRUSS SUPERSTRUCTURE.

TIMBER & LUMBER: SOLID SAWN TIMBER MEMBERS SHALL CONFORM TO THE REQUIREMENTS OF THE GRADING RULES AGENCY FOR THE SPECIES, TYPE, AND GRADE SPECIFIED BELOW.

DECK PLANKS AND BACKING PLANKS
- COASTAL REGION DOUGLAS FIR – LARCH ROUGH SAWN NO.1 GRADE, GRADING RULES AGENCY – WWPA, WCLIB

RUNNING PLANKS AND RUB RAIL
- COASTAL REGION DOUGLAS FIR – LARCH ROUGH SAWN NO.2 GRADE, GRADING RULES AGENCY – WWPA, WCLIB

RAILS, HANDRAILS UNTREATED
- REDWOOD, S4S, NO.2 GRADE GRADING RULES AGENCY – RIS
- WESTERN RED CEDAR, S4S, SELECT STRUCTURAL GRADE GRADING RULES AGENCY – WWPA, WCLIB

TREATED
- HEM – FIR/DOUGLAS FIR, S4S, NO.1 GRADE GRADING RULES AGENCY – WWPA, WCLIB

TREATMENT: SEE PROJECT CRITERIA FOR MEMBERS IDENTIFIED TO BE TREATED AND FOR TREATMENT TYPE. PRESERVATIVE TREATMENT SHALL BE IN ACCORDANCE WITH THE CURRENT AMERICAN WOOD PROTECTION ASSOCIATION (AWPA) SPECIFICATIONS USING THE TREATMENT MATERIALS LISTED BELOW. TREATMENT WILL COMPLY WITH THE REQUIREMENTS OF THE CURRENT EDITION OF WESTERN WOOD PRESERVERS INSTITUTE (WWPI) "BEST MANAGEMENT PRACTICES FOR THE USE OF TREATED WOOD IN AQUATIC ENVIRONMENTS".

DECKING, RUNNING PLANKS, IF TREATED
- AWPA USE CATEGORY SYSTEM (U1) FOR USE CATEGORY 3B ABOVE GROUND – EXPOSED (UC3B)
- PENTACHLOROPHENOL IN LIGHT OIL (TYPE C SOLVENT)
- COPPER NAPHTHENATE (CuN) IN LIGHT OIL (TYPE C SOLVENT)

SILLS, BACKING PLANKS, CRIBS, TIMBER WALLS, IF TREATED
- AWPA USE CATEGORY SYSTEM (U1) FOR USE CATEGORY 4B GROUND CONTACT – HEAVY DUTY (UC4B)
- PENTACHLOROPHENOL IN HEAVY OIL (TYPE A SOLVENT)
- COPPER NAPHTHENATE (CuN) IN HEAVY OIL (TYPE A SOLVENT)

FIELD TREATMENT: COPPER NAPHTHENATE (2% SOLUTION) SHALL BE FURNISHED FOR FIELD TREATING OF WOOD. ALL ABRASIONS AND FIELD CUTS – APPROVED BY THE C.O.R. – SHALL BE CAREFULLY TRIMMED AND GIVEN THREE BRUSH COATS OF THE FIELD TREATMENT SOLUTION. WHERE APPROVED FIELD DRILLING OF BOLT OR NAIL HOLES IS REQUIRED, THE HOLES SHALL BE FILLED WITH PRESERVATIVE PRIOR TO INSERTING THE FASTENERS.

TIMBER FABRICATION: SUBMIT SHOP DRAWINGS FOR ALL TIMBER BRIDGE COMPONENTS (EXCEPT TIMBER RUNNING PLANKS). SHOW ALL DIMENSIONS AND FABRICATION DETAILS FOR ALL CUT OR BORED TIMBER. FIELD DRILLING OF HOLES SHALL NOT BE ALLOWED UNLESS OTHERWISE NOTED ON THE PLANS.

U.S. DEPARTMENT OF AGRICULTURE
FOREST SERVICE
STANDARD TRAIL PLAN

PROJECT NAME & LOCATION

DRAWING NAME
PREFABRICATED STEEL TRAIL BRIDGE

SECTION
964 - PREFABRICATED TRAIL BRIDGE

TYPICAL ID
PRE

REVISION DATE

NOT TO SCALE

DRAWING NO.
STD_964-10-02a

SHEET
OF

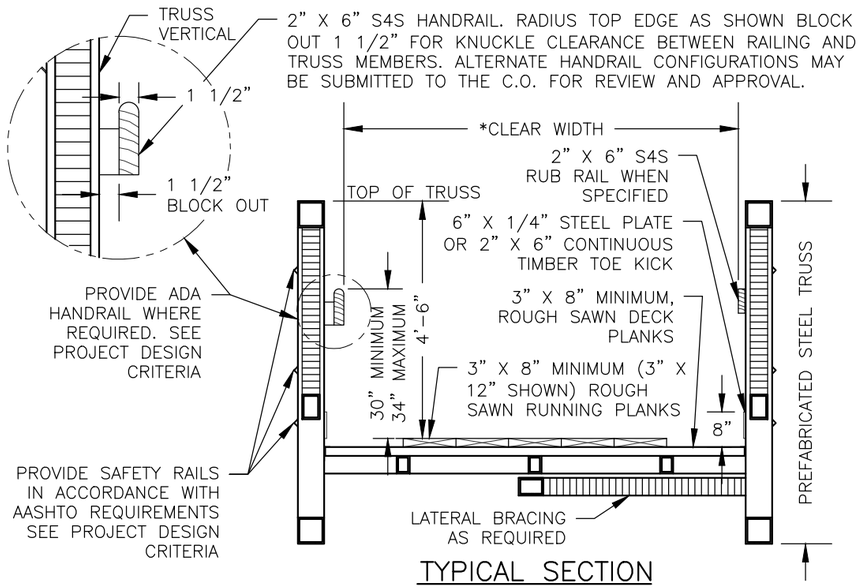

TYPICAL SECTION

*INSIDE FACE TO INSIDE FACE(RUB RAILS AND RAIL)

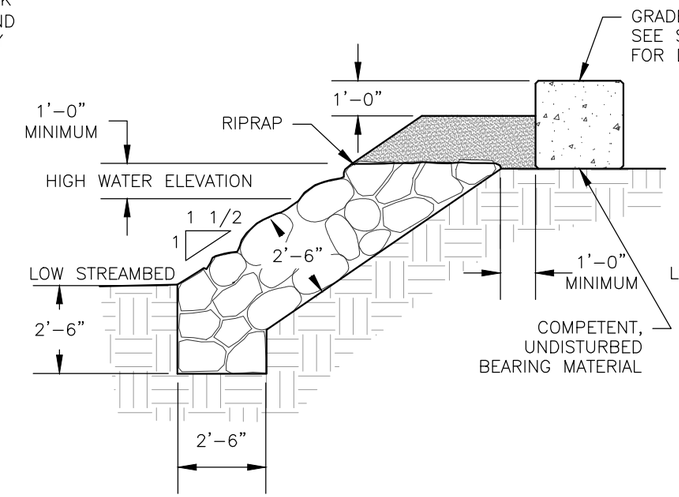

GRADE BEAM FOUNDATION
RIPRAP ARMORING

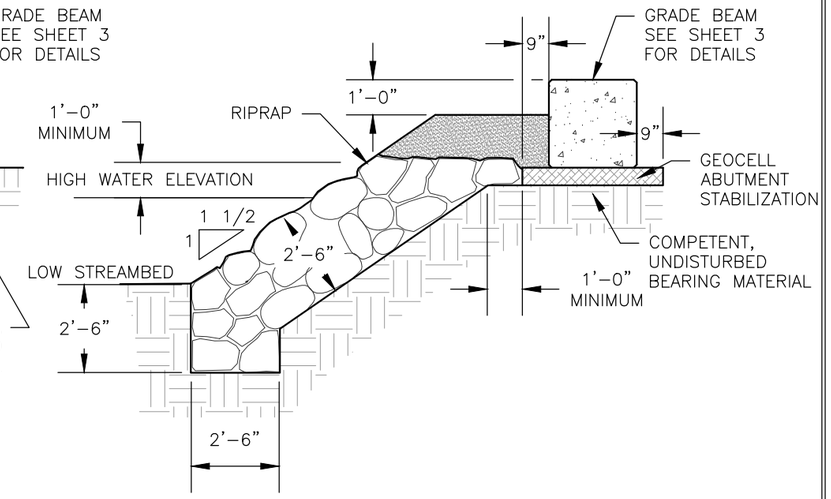

GRADE BEAM FOUNDATION
RIPRAP ARMORING W/GEOCELL

GENERAL NOTES:

SPECIFICATIONS: MATERIALS AND CONSTRUCTION OF THIS STRUCTURE SHALL BE IN ACCORDANCE WITH THE STANDARD SPECIFICATION FOR CONSTRUCTION OF ROADS AND BRIDGES ON FEDERAL HIGHWAY PROJECTS (FP-03) AND STANDARD SPECIFICATIONS FOR CONSTRUCTION OF TRAILS AND TRAIL BRIDGES ON FEDERAL PROJECTS,

PREFABRICATED STEEL BRIDGE SUPERSTRUCTURE: PREFABRICATED STEEL SUPERSTRUCTURE DESIGN MUST BE A TRUSS CONFIGURATION SIMILAR TO THAT SHOWN ON THE DRAWINGS. THE BRIDGE SHALL MAINTAIN THE CLEARANCES ABOVE HIGH WATER INDICATED ON THE BRIDGE ELEVATION. THE BRIDGE CROSS-SECTION SHALL BE DETERMINED BY THE CONTRACTOR BUT SHALL PROVIDE THE WIDTH AND RAILING DETAILS INDICATED ON THE BRIDGE TYPICAL SECTION. THE CONTRACTOR SHALL DETERMINE TRUSS HEIGHT AND THE LOCATION OF THE DECK WITH RESPECT TO THE TOP AND BOTTOM CHORDS (U FRAME VS. H FRAME). OVERHEAD LATERAL BRACING IS UNACCEPTABLE. ALL RELATED DETAILS SUCH AS PROFILE, ABUTMENT DETAILS, BEARINGS, AND TIMBER DECKING SHALL BE THE RESPONSIBILITY OF THE CONTRACTOR TO FINALIZE AND CONSTRUCT.

THE PREFABRICATED STEEL BRIDGE SUPERSTRUCTURE, ABUTMENT FOUNDATIONS, AND ASSOCIATED DETAILS INCLUDING TIMBER COMPONENTS SHALL BE DESIGNED UNDER THE DIRECTION OF A REGISTERED PROFESSIONAL ENGINEER. THE COMPLETED DESIGN, DRAWINGS, AND SPECIFICATION PACKAGE SHALL BE SUBMITTED TO THE CONTRACTING OFFICER FOR REVIEW AND APPROVAL.

DESIGN: THE DESIGN OF ALL PREFABRICATED STEEL BRIDGE SUPERSTRUCTURE ELEMENTS SHALL COMPLY WITH THE AASHTO LRFD GUIDE SPECIFICATION FOR DESIGN OF PEDESTRIAN BRIDGES, CURRENT EDITION AND AASHTO LRFD BRIDGE DESIGN SPECIFICATIONS, CURRENT EDITION. PROVIDE CAMBER FOR 100% OF THE FULL DEAD LOAD DEFLECTION PLUS 1% OF BRIDGE SPAN. SUBMIT SHOP DRAWINGS AND CALCULATIONS FOR APPROVAL AND MUST BE APPROVED BEFORE FABRICATION.

MATERIALS: USE STEEL SHAPES, PLATES AND BARS OF WEATHERING STEEL CONFORMING TO AASHTO M270, GRADE 50W (ASTM A588 OR ASTM A242) OR ASTM A847 FOR SQUARE AND RECTANGULAR TUBING. MINIMUM STEEL THICKNESS SHALL BE AS SPECIFIED IN THE GUIDE SPECIFICATIONS FOR DESIGN OF PEDESTRIAN BRIDGES. USE HIGH STRENGTH BOLTS CONFORMING TO AASHTO M164, (ASTM A325), TYP 3, UNLESS NOTED OTHERWISE. USE MALLEABLE IRON WASHERS AGAINST WOOD.

STEEL FABRICATION: THE PREFABRICATED STEEL BRIDGE SUPERSTRUCTURE SHALL BE FABRICATED BY AN AISC CERTIFIED PLANT – SIMPLE STEEL BRIDGES OR COMPLEX STEEL STRUCTURES. WHEN STRUCTURAL STEEL IS TO BE WELDED, THE WELDING PROCEDURE SHALL BE IN ACCORDANCE WITH AWS D1.5 AND SHALL BE SUITABLE FOR THE GRADE OF STEEL AND INTENDED USE OR SERVICE.

ERECTION PLAN: THE CONTRACTOR SHALL SUBMIT AN ERECTION PLAN FOR THE PREFABRICATED STEEL BRIDGE SUPERSTRUCTURE TO THE C.O. FOR APPROVAL 14 DAYS BEFORE ERECTION IS SCHEDULED. IF ALLOWED UNDER THE PROJECT DESIGN CRITERIA, TEMPORARY IN-STREAM SUPPORT BENTS MAY BE USED FOR THE ERECTION OF THE PREFABRICATED STEEL TRUSS BRIDGE. THE IN-STREAM BENTS SHALL BE CRIBBING, SILLS, CONCRETE BLOCKS OR OTHER SUPPORTS AND SHALL BE PLACED WITH MINIMAL DISTURBANCE WITHIN THE STREAM. ALL MATERIALS TO CONSTRUCT THE TEMPORARY IN-STREAM BENTS SHALL BE REMOVED. THE SUBMITTALS SHALL INCLUDE DRAWINGS INDICATING TEMPORARY BENT LOCATIONS AND DETAILS ALSO INCLUDED, THE CONTRACTOR SHALL INDICATE THE EQUIPMENT AND METHODS PROPOSED TO INSTALL AND REMOVE THE TEMPORARY BENTS AND ERECT THE NEW PREFABRICATED STEEL TRUSS SUPERSTRUCTURE.

TIMBER & LUMBER: SOLID SAWN TIMBER MEMBERS SHALL CONFORM TO THE REQUIREMENTS OF THE GRADING RULES AGENCY FOR THE SPECIES, TYPE, AND GRADE SPECIFIED BELOW.

DECK PLANKS AND BACKING PLANKS
- SOUTHERN PINE ROUGH SAWN NO.2 GRADE, GRADING RULES AGENCY – SPIB

RUNNING PLANKS AND RUB RAIL
- SOUTHERN PINE ROUGH SAWN NO.2 GRADE, GRADING RULES AGENCY – SPIB

RAILS, HANDRAILS UNTREATED
- BALDCYPRESS, S4S, NO.1 GRADE GRADING RULES AGENCY – SPIB
- WHITE OAK, S4S, SELECT STRUCTURAL GRADE GRADING RULES AGENCY – NELMA

TREATED
- SOUTHERN PINE, S4S, NO.2 GRADE GRADING RULES AGENCY – SPIB

TREATMENT: SEE PROJECT CRITERIA FOR MEMBERS IDENTIFIED TO BE TREATED AND FOR TREATMENT TYPE. PRESERVATIVE TREATMENT SHALL BE IN ACCORDANCE WITH THE CURRENT AMERICAN WOOD PROTECTION ASSOCIATION (AWPA) SPECIFICATIONS USING THE TREATMENT MATERIALS LISTED BELOW. TREATMENT WILL COMPLY WITH THE REQUIREMENTS OF THE CURRENT EDITION OF WESTERN WOOD PRESERVERS INSTITUTE (WWPI) "BEST MANAGEMENT PRACTICES FOR THE USE OF TREATED WOOD IN AQUATIC ENVIRONMENTS".

DECKING, RUNNING PLANKS, IF TREATED
- AWPA USE CATEGORY SYSTEM (U1) FOR USE CATEGORY 3B ABOVE GROUND – EXPOSED (UC3B)
- PENTACHLOROPHENOL IN LIGHT OIL (TYPE C SOLVENT)
- COPPER NAPHTHENATE (CuN) IN LIGHT OIL (TYPE C SOLVENT)

SILLS, BACKING PLANKS, CRIBS, TIMBER WALLS, IF TREATED
- AWPA USE CATEGORY SYSTEM (U1) FOR USE CATEGORY 4B GROUND CONTACT – HEAVY DUTY (UC4B)
- PENTACHLOROPHENOL IN HEAVY OIL (TYPE A SOLVENT)
- COPPER NAPHTHENATE (CuN) IN HEAVY OIL (TYPE A SOLVENT)

FIELD TREATMENT: COPPER NAPHTHENATE (2% SOLUTION) SHALL BE FURNISHED FOR FIELD TREATING OF WOOD. ALL ABRASIONS AND FIELD CUTS – APPROVED BY THE C.O.R. – SHALL BE CAREFULLY TRIMMED AND GIVEN THREE BRUSH COATS OF THE FIELD TREATMENT SOLUTION. WHERE APPROVED FIELD DRILLING OF BOLT OR NAIL HOLES IS REQUIRED, THE HOLES SHALL BE FILLED WITH PRESERVATIVE PRIOR TO INSERTING THE FASTENERS.

TIMBER FABRICATION: SUBMIT SHOP DRAWINGS FOR ALL TIMBER BRIDGE COMPONENTS (EXCEPT TIMBER RUNNING PLANKS). SHOW ALL DIMENSIONS AND FABRICATION DETAILS FOR ALL CUT OR BORED TIMBER. FIELD DRILLING OF HOLES SHALL NOT BE ALLOWED UNLESS OTHERWISE NOTED ON THE PLANS.

U.S. DEPARTMENT OF AGRICULTURE
FOREST SERVICE
STANDARD TRAIL PLAN

PROJECT NAME & LOCATION

DRAWING NAME
PREFABRICATED STEEL TRAIL BRIDGE
SECTION **964 - PREFABRICATED TRAIL BRIDGE**
TYPICAL ID **PRE**

REVISION DATE
NOT TO SCALE

DRAWING NO. **STD_964-10-02b**
SHEET OF

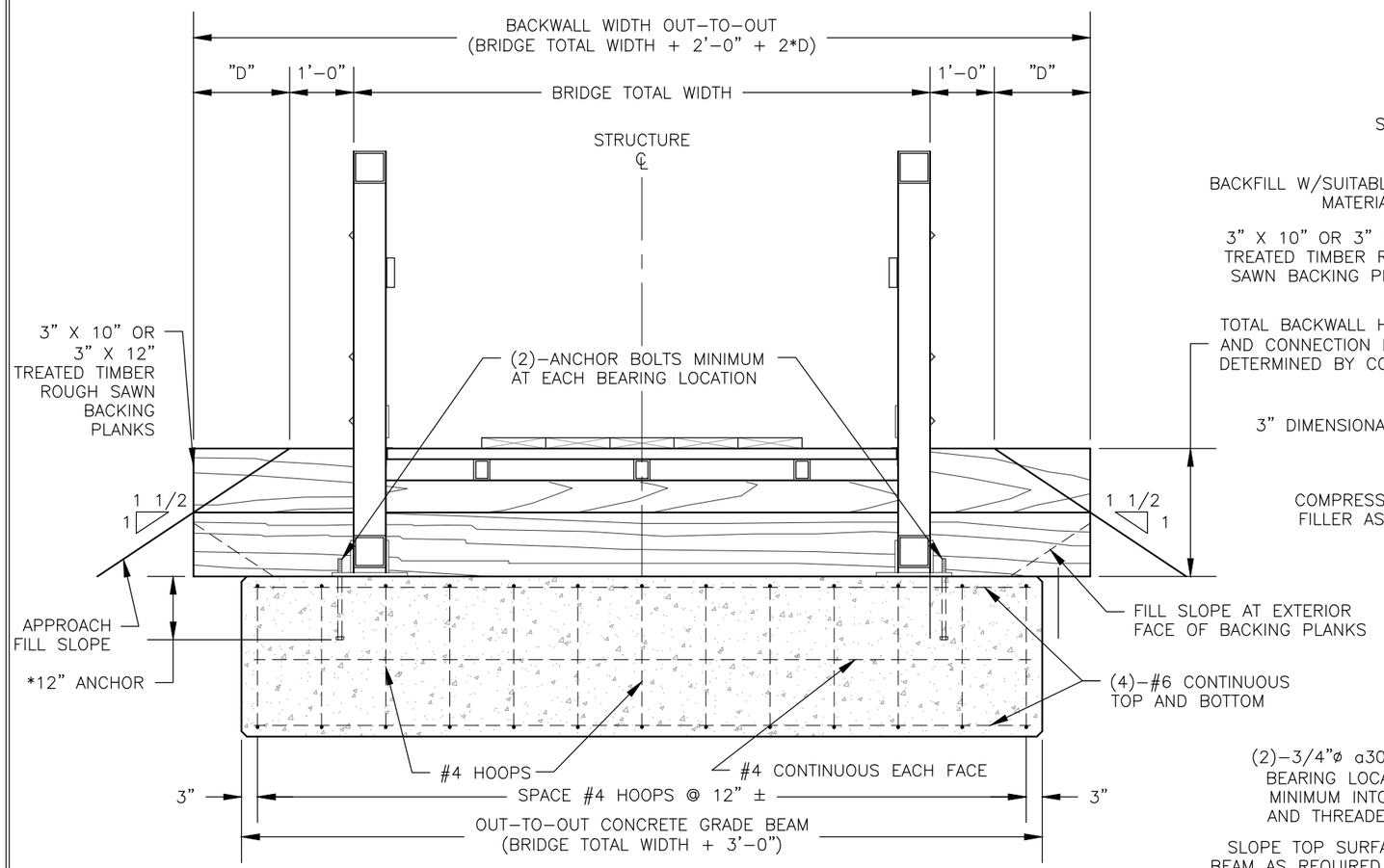

ELEVATION – GRADE BEAM

* 12" CAST-IN-PLACE ANCHOR OR 7" EPOXY ANCHOR WHEN APPROVED BY CO.

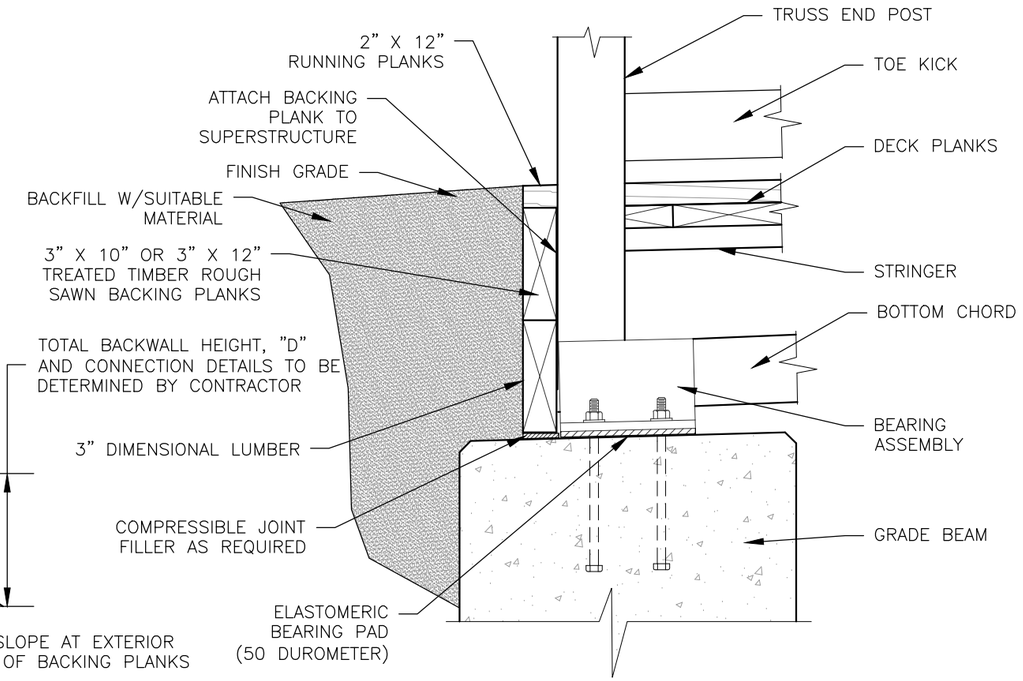

BEARING DETAIL

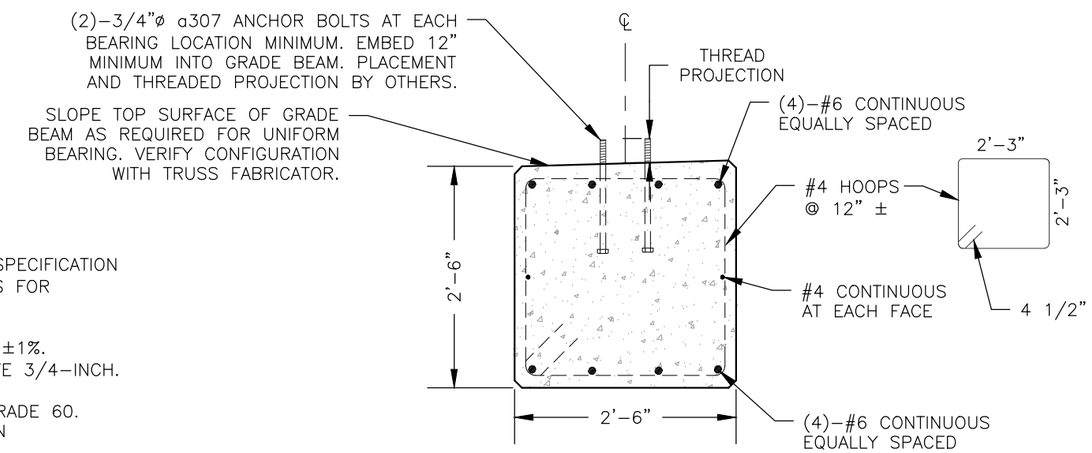

TYPICAL SECTION

NOTES:

SPECIFICATIONS: MATERIALS AND CONSTRUCTION OF THIS STRUCTURE SHALL BE IN ACCORDANCE WITH THE STANDARD SPECIFICATION FOR CONSTRUCTION OF ROADS AND BRIDGES ON FEDERAL HIGHWAY PROJECTS (FP-03) AND STANDARD SPECIFICATIONS FOR CONSTRUCTION OF TRAILS AND TRAIL BRIDGES ON FEDERAL PROJECTS,

CONCRETE: USE CLASS A(AE) FOR CONCRETE, f'c = 4000 PSI AT 28 DAYS WITH AN ENTRAINED AIR CONTENT OF 5% ±1%. PROVIDE ALL CONCRETE IN ACCORDANCE WITH AN APPROVED MIX DESIGN. CHAMFER ALL EXPOSED EDGES OF CONCRETE 3/4-INCH.

REINFORCING STEEL: USE REINFORCING STEEL OF THE DEFORMED TYPE CONFORMING TO AASHTO M31 (ASTM A615), GRADE 60. CONCRETE COVER SHALL BE AS SHOWN, WHERE NOT SHOWN IT SHALL CONFORM TO AASHTO. CUT AND BEND STEEL IN ACCORDANCE WITH ACI 315.

CONCRETE GRADE BEAM: DETAILS SHOWN ON THIS SHEET PROVIDE MINIMUM SIZES AND REQUIREMENTS. THE CONTRACTOR SHALL PREPARE AND SUBMIT COMPLETE GRADE BEAM DETAILS WITH THE PROPOSED SUPERSTRUCTURE DESIGN AND SHOP DRAWINGS.

U.S. DEPARTMENT OF AGRICULTURE
FOREST SERVICE
STANDARD TRAIL PLAN

PROJECT NAME & LOCATION

DRAWING NAME
PREFABRICATED STEEL TRAIL BRIDGE
SECTION
964 - PREFABRICATED TRAIL BRIDGE
TYPICAL ID
PRE

REVISION DATE
NOT TO SCALE

DRAWING NO.
STD_964-10-03
SHEET
OF

STANDARD BOARDWALK

TYPICAL ID	SECTION TYPE	OVERALL WIDTH	SURFACE WIDTH	FOOTING MATERIAL			POST/SILLS/BACKWALLS				HEADER BEAM/STRINGERS/ DECK/CURB/RAILING SYSTEM			COMMENTS
				TYPE	DEPTH	WIDTH	POST HEIGHT	POST EMBEDMENT DEPTH	SPECIES	PRESERV. TYPE	DECK SIZE	SPECIES	PRESERV. TYPE	
SB1–1				F						P			P	

N/A WHEN NOT APPLICABLE

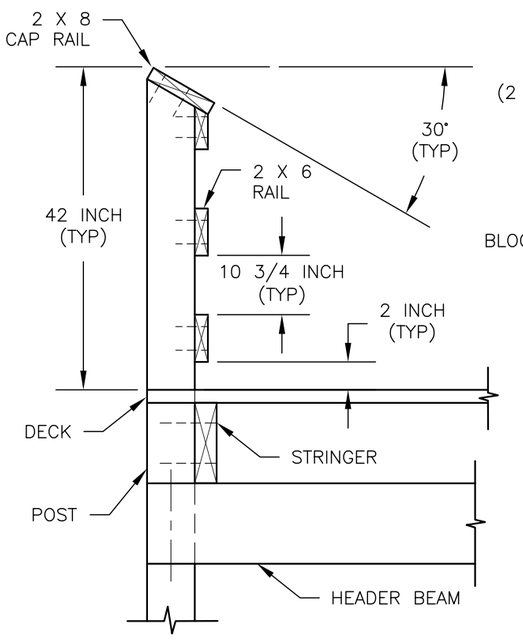

RAIL SYSTEM DETAIL

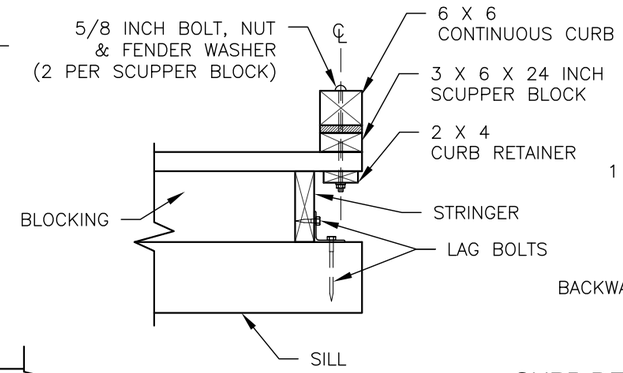

BACKWALL NOT SHOWN FOR CLARITY

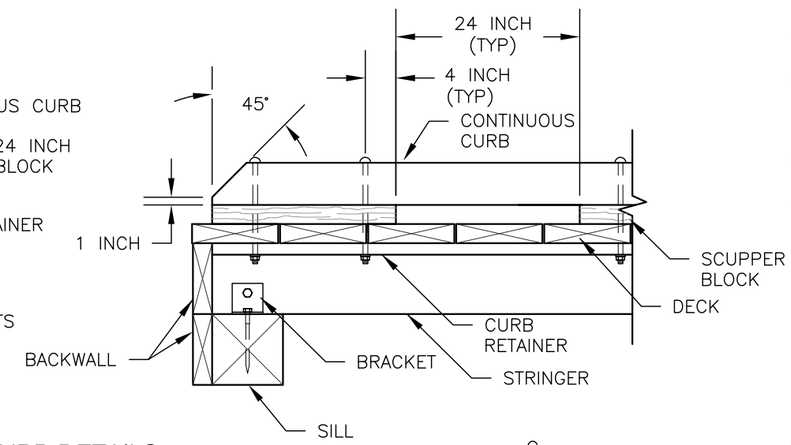

CURB DETAILS

NOTES:

1. DESIGN LOAD: 100 PSF PEDESTRIAN LOAD.
2. ALL MATERIAL TYPE SHALL BE DOUGLAS FIR OR SOUTHERN PINE NO. 2 OR BETTER AS SPECIFIED IN THE ABOVE TABLE.
3. ALL FASTENERS SHALL BE GALVANIZED.
4. FASTENERS:
   - DECKING: 60d 6 INCH RING SHANK NAILS OR DECK SCREWS 2 PER DECK STRINGER CONNECTION.
   - RAILING: NO. 10 X 4 INCH LONG WOOD SCREWS 2 PER RAIL POST CONNECTION.
   - STRINGERS & BACKWALLS: 40d 5 INCH LONG RING SHANK NAILS.
5. ALERNATIVE FOR 7/8 BOLTS FOR HEADER BEAM IS BRACKET WITH AN ALLOWABLE LOAD OF 1100 LBS EACH SIDE.

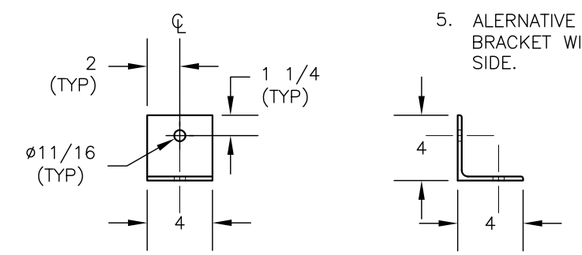

BRACKET DETAIL

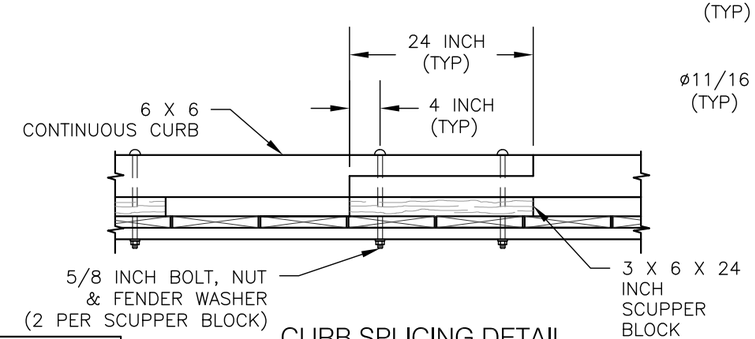

CURB SPLICING DETAIL

FOOTING MATERIAL

TYPE	MATERIAL	GRADATION	COMMENTS
FT1	CONCRETE		
FT2	AGGREGATE		
FT3			

PRESERVATIVE TREATMENT – (REFER TO AWPA USE CATEGORY SYSTEM)			
PRESERVATIVE TYPE	TREATMENT TYPE	USE CATEGORY	COMMENTS
P1	WB	UC4A	
P2	WB	UC3B	
P3			

TREATMENT TYPE

WB = WATERBORNE
OT = OIL–BORNE

USE CATEGORY

UC3B = ABOVE GROUND – EXPOSED
UC4A = GROUND CONTACT – GENERAL USE
UC4B = GROUND CONTACT – HEAVY DUTY

U.S. DEPARTMENT OF AGRICULTURE
FOREST SERVICE
STANDARD TRAIL PLAN

PROJECT NAME & LOCATION

DRAWING NAME
STANDARD BOARDWALK

SECTION
938 - BOARDWALKS

TYPICAL ID
SB1

REVISION DATE
XX/XX/XX

NO SCALE

DRAWING NO.
STD_938-10-01

SHEET
OF

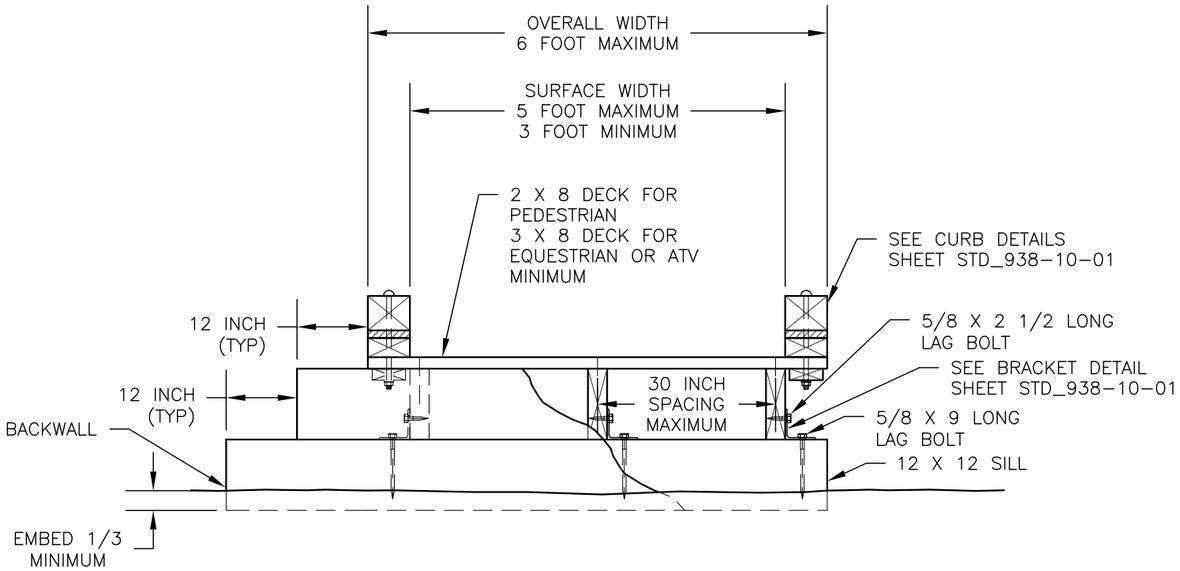

A TYPICAL GROUND SECTION

BLOCKING REQUIRED AT EVERY SUPPORT NOT SHOWN FOR CLARITY

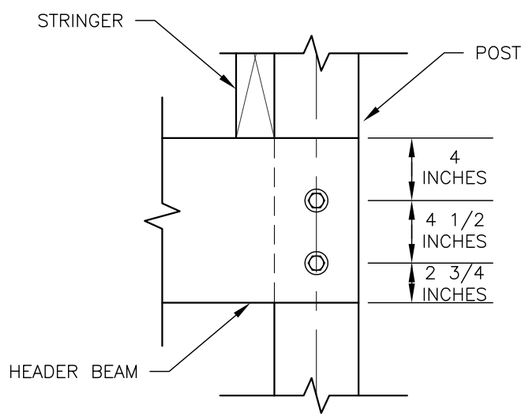

BOLT DETAIL

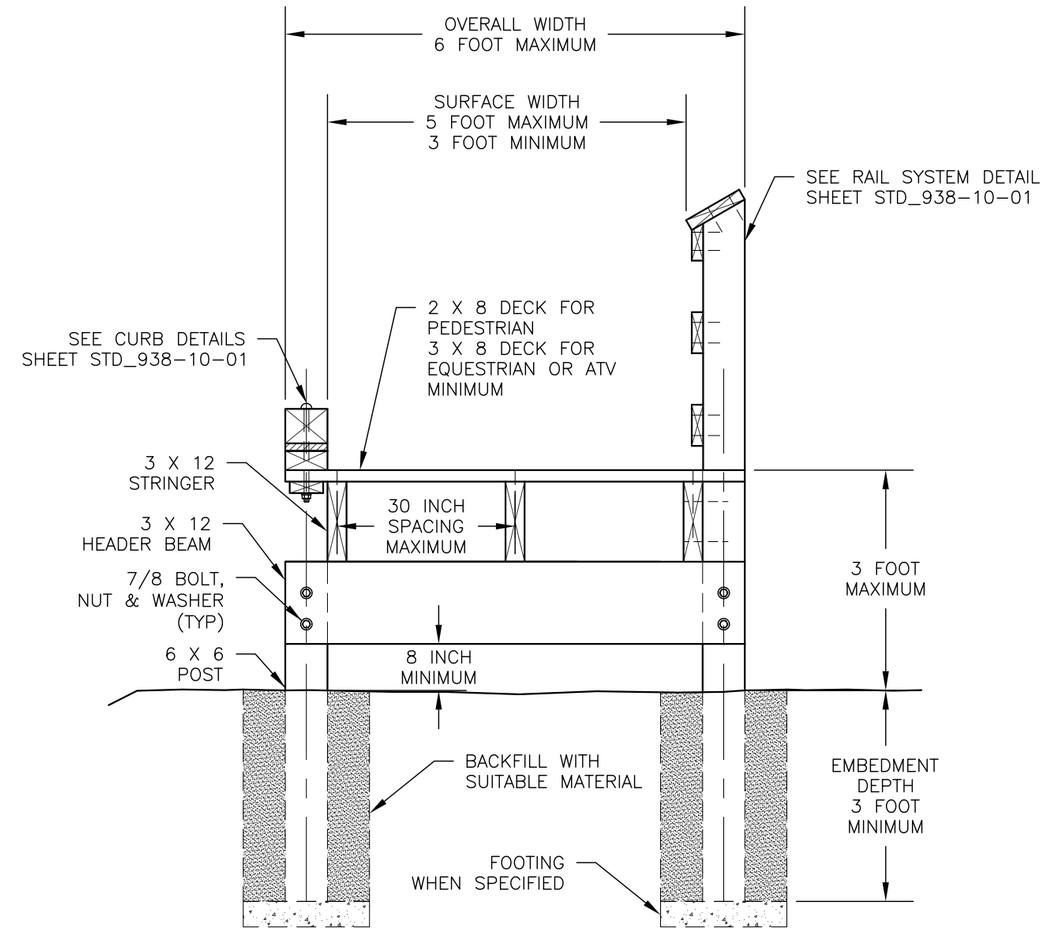

B TYPICAL ELEVATED SECTION

LESS THAN 3 FEET WITH CURB
BLOCKING REQUIRED AT EVERY SUPPORT
NOT SHOWN FOR CLARITY

C TYPICAL ELEVATED SECTION

LESS THAN 3 FEET WITH CURB
BLOCKING REQUIRED AT EVERY SUPPORT
NOT SHOWN FOR CLARITY

U.S. DEPARTMENT OF AGRICULTURE
FOREST SERVICE

STANDARD TRAIL PLAN

PROJECT NAME & LOCATION

DRAWING NAME
STANDARD BOARDWALK

SECTION
938 - BOARDWALKS

TYPICAL ID
SB2

REVISION DATE
XX/XX/XX

NO SCALE

DRAWING NO.
STD_938-10-02

SHEET
OF

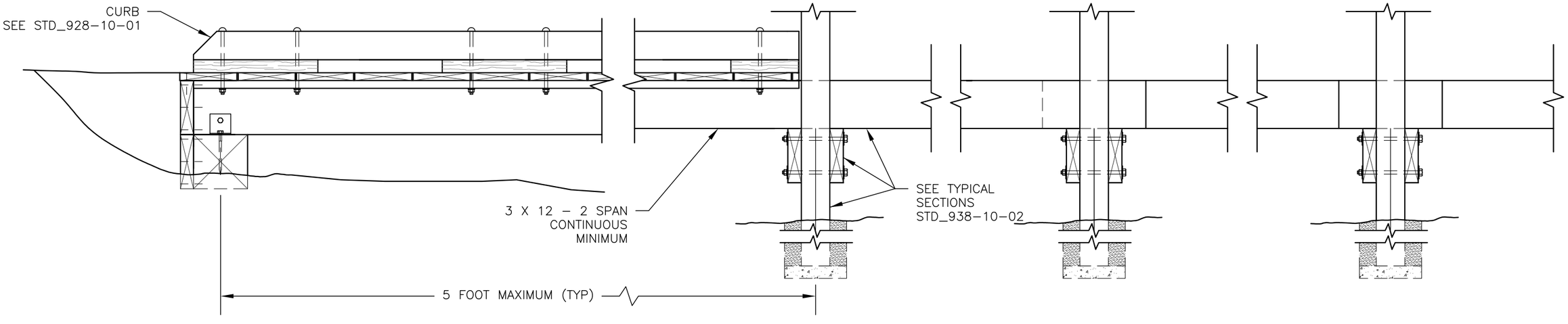

TYPICAL STRINGER DETAIL

STRINGER LAP JOINT DETAIL

STRINGER BLOCKING DETAIL

ABUTMENT PROFILE VIEW

PIER PROFILE VIEW

BLOCKING, CROSS BRACING, DECKING AND RAIL SYSTEM NOT SHOWN FOR CLARITY

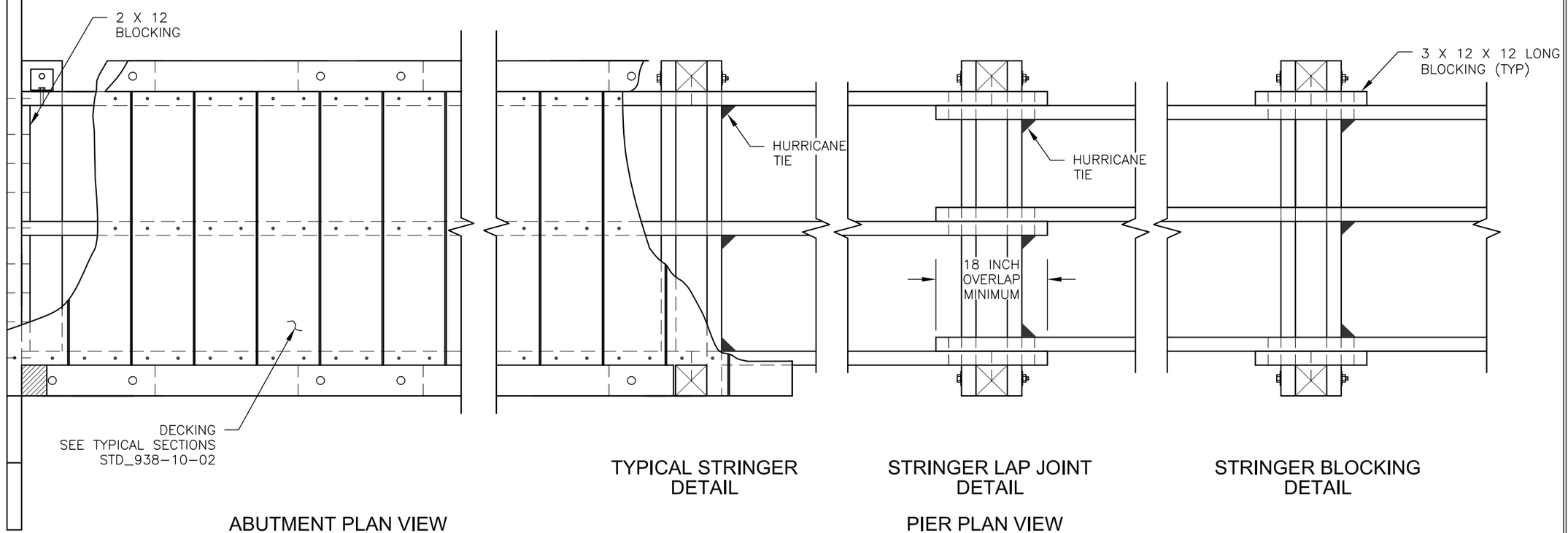

TYPICAL STRINGER DETAIL

STRINGER LAP JOINT DETAIL

STRINGER BLOCKING DETAIL

ABUTMENT PLAN VIEW

PIER PLAN VIEW

BLOCKING, CROSS BRACING, DECKING AND RAIL SYSTEM NOT SHOWN FOR CLARITY

SHEET 3 OF 3

U.S. DEPARTMENT OF AGRICULTURE
FOREST SERVICE

STANDARD TRAIL PLAN

PROJECT NAME & LOCATION

DRAWING NAME
STANDARD BOARDWALK

SECTION
938 - BOARDWALKS

TYPICAL ID
SB3

REVISION DATE
XX/XX/XX

NO SCALE

DRAWING NO.
STD_938-10-03

SHEET
OF

ELEVATED BOARDWALK

TYPICAL ID	SECTION TYPE	OVERALL WIDTH	SURFACE WIDTH	FOOTING MATERIAL			POST/SILLS/BACKWALLS				HEADER BEAM/STRINGERS/ DECK/CURB/RAILING SYSTEM			COMMENTS
				TYPE	DEPTH	WIDTH	POST HEIGHT	POST EMBEDMENT DEPTH	SPECIES	PRESERV. TYPE	DECK SIZE	SPECIES	PRESERV. TYPE	
SBW–1				F						P			P	

N/A WHEN NOT APPLICABLE

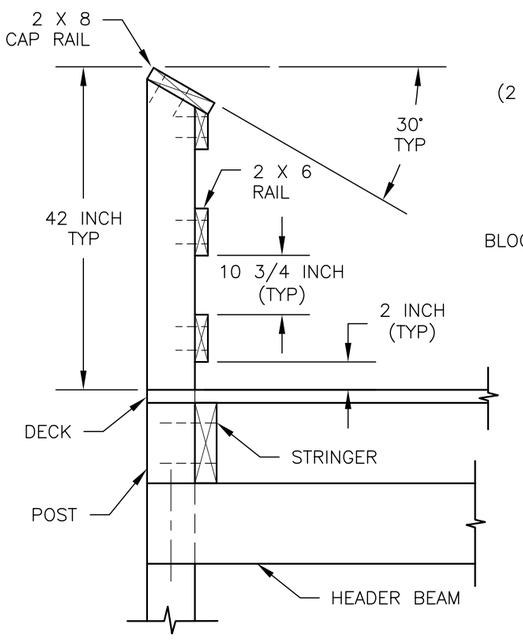

RAIL SYSTEM DETAIL

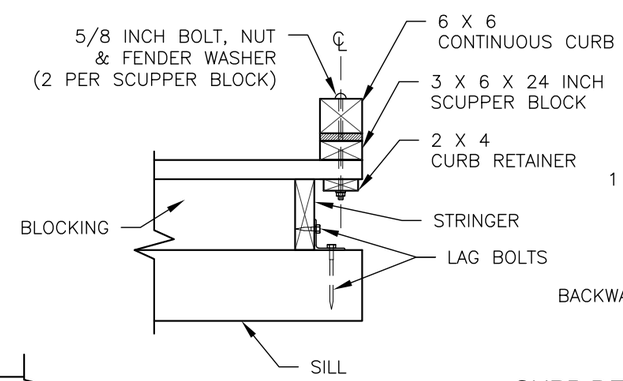

BACKWALL NOT SHOWN FOR CLARITY

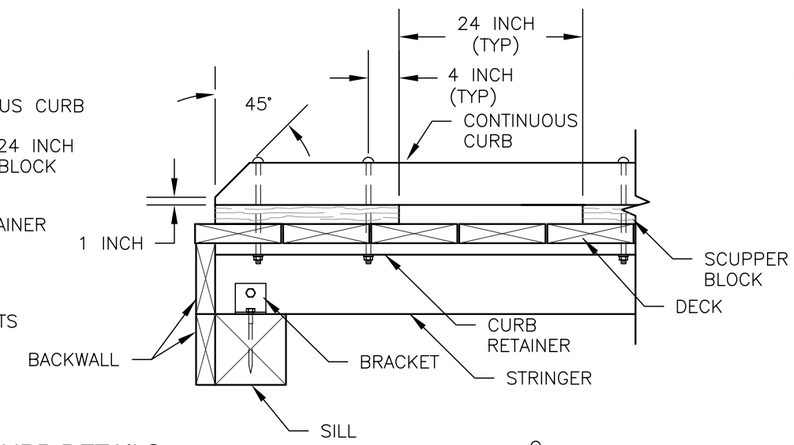

CURB DETAILS

NOTES:

1. DESIGN LOAD: 100 PSF PEDESTRIAN LOAD.
2. ALL MATERIAL TYPE SHALL BE DOUGLAS FIR OR SOUTHERN PINE NO. 2 OR BETTER AS SPECIFIED IN THE ABOVE TABLE.
3. ALL FASTENERS SHALL BE GALVANIZED.
4. FASTENERS:
   - DECKING: 60d 6 INCH RING SHANK NAILS OR DECK SCREWS 2 PER DECK STRINGER CONNECTION.
   - RAILING: NO. 10 X 4 INCH LONG WOOD SCREWS 2 PER RAIL POST CONNECTION.
   - STRINGERS & BACKWALLS: 40d 5 INCH LONG RING SHANK NAILS.
5. ALERNATIVE FOR 7/8 BOLTS FOR HEADER BEAM IS BRACKET WITH AN ALLOWABLE LOAD OF 1100 LBS EACH SIDE.

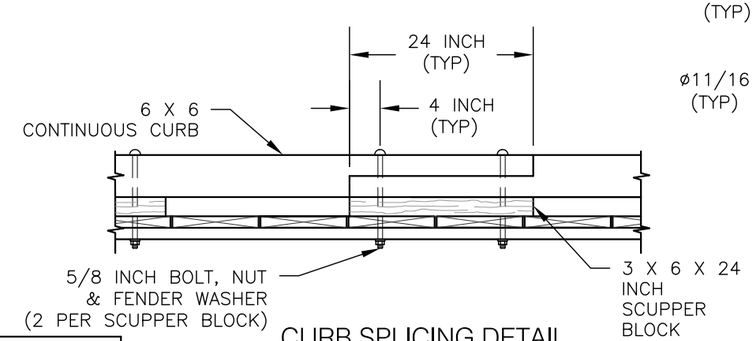

CURB SPLICING DETAIL

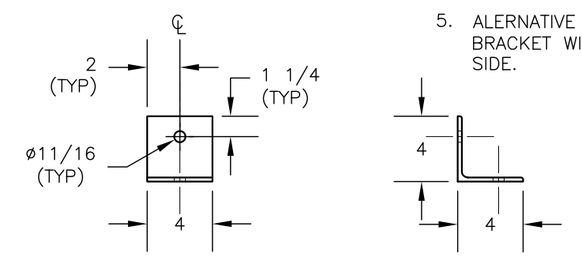

BRACKET DETAIL

FOOTING MATERIAL

TYPE	MATERIAL	GRADATION	COMMENTS
FT1	CONCRETE		
FT2	AGGREGATE		
FT3			

PRESERVATIVE TREATMENT – (REFER TO AWPA USE CATEGORY SYSTEM)			
PRESERVATIVE TYPE	TREATMENT TYPE	USE CATEGORY	COMMENTS
P1	WB	UC4A	
P2	WB	UC3B	
P3			

TREATMENT TYPE

WB = WATERBORNE
OT = OIL–BORNE

USE CATEGORY

UC3B = ABOVE GROUND – EXPOSED
UC4A = GROUND CONTACT – GENERAL USE
UC4B = GROUND CONTACT – HEAVY DUTY

SHEET 1 OF 4

U.S. DEPARTMENT OF AGRICULTURE
FOREST SERVICE
STANDARD TRAIL PLAN

PROJECT NAME & LOCATION

DRAWING NAME
ELEVATED BOARDWALK

SECTION
938 - BOARDWALKS

TYPICAL ID
EB1

REVISION DATE
XX/XX/XX

NO SCALE

DRAWING NO.
STD_938-20-01

SHEET
OF

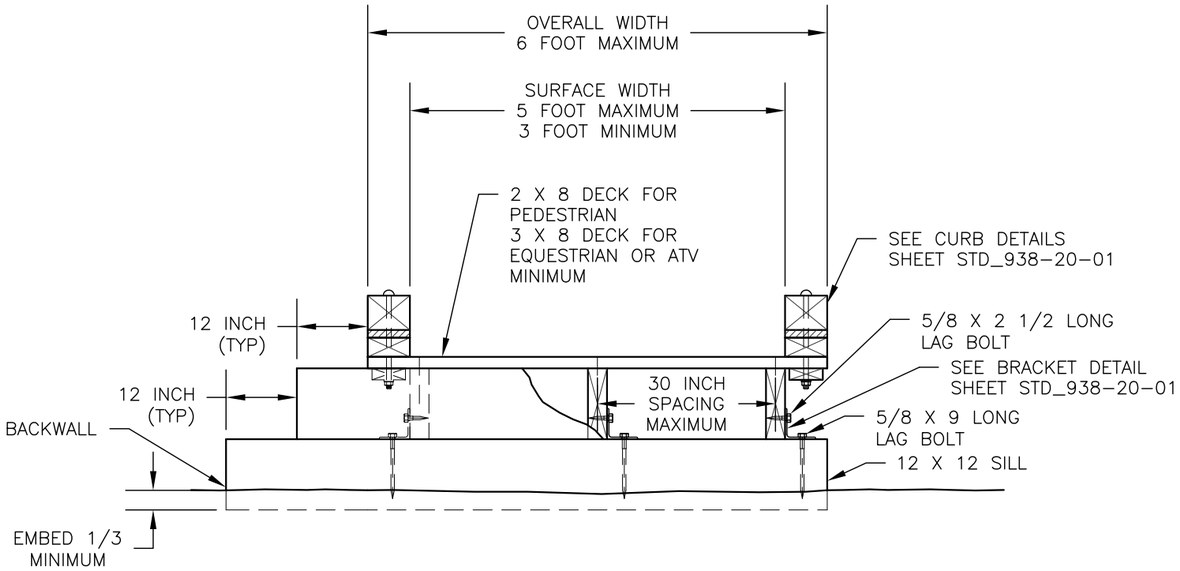

A TYPICAL GROUND SECTION

BLOCKING REQUIRED AT EVERY
SUPPORT NOT SHOWN FOR CLARITY

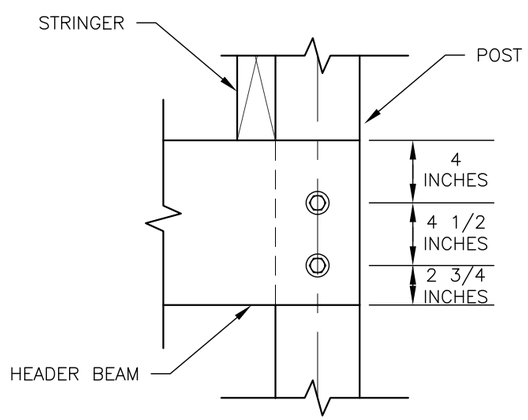

BOLT DETAIL

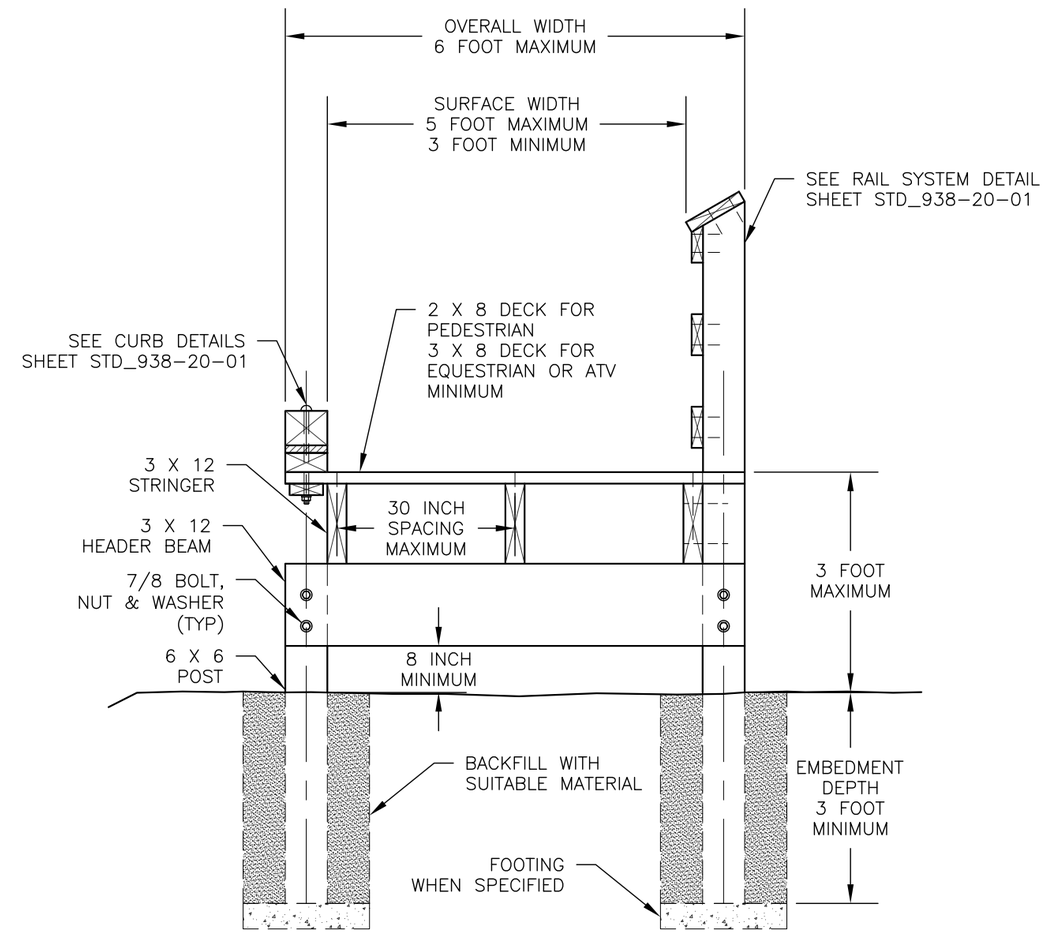

B TYPICAL ELEVATED SECTION

LESS THAN 3 FEET WITH CURB
BLOCKING REQUIRED AT EVERY SUPPORT
NOT SHOWN FOR CLARITY

C TYPICAL ELEVATED SECTION

LESS THAN 3 FEET WITH CURB
BLOCKING REQUIRED AT EVERY SUPPORT
NOT SHOWN FOR CLARITY

U.S. DEPARTMENT OF AGRICULTURE
FOREST SERVICE

STANDARD TRAIL PLAN

PROJECT NAME & LOCATION

DRAWING NAME
ELEVATED BOARDWALK

SECTION
938 - BOARDWALKS

TYPICAL ID
EB2

REVISION DATE
XX/XX/XX

NO SCALE

DRAWING NO.
STD_938-20-02

SHEET
OF

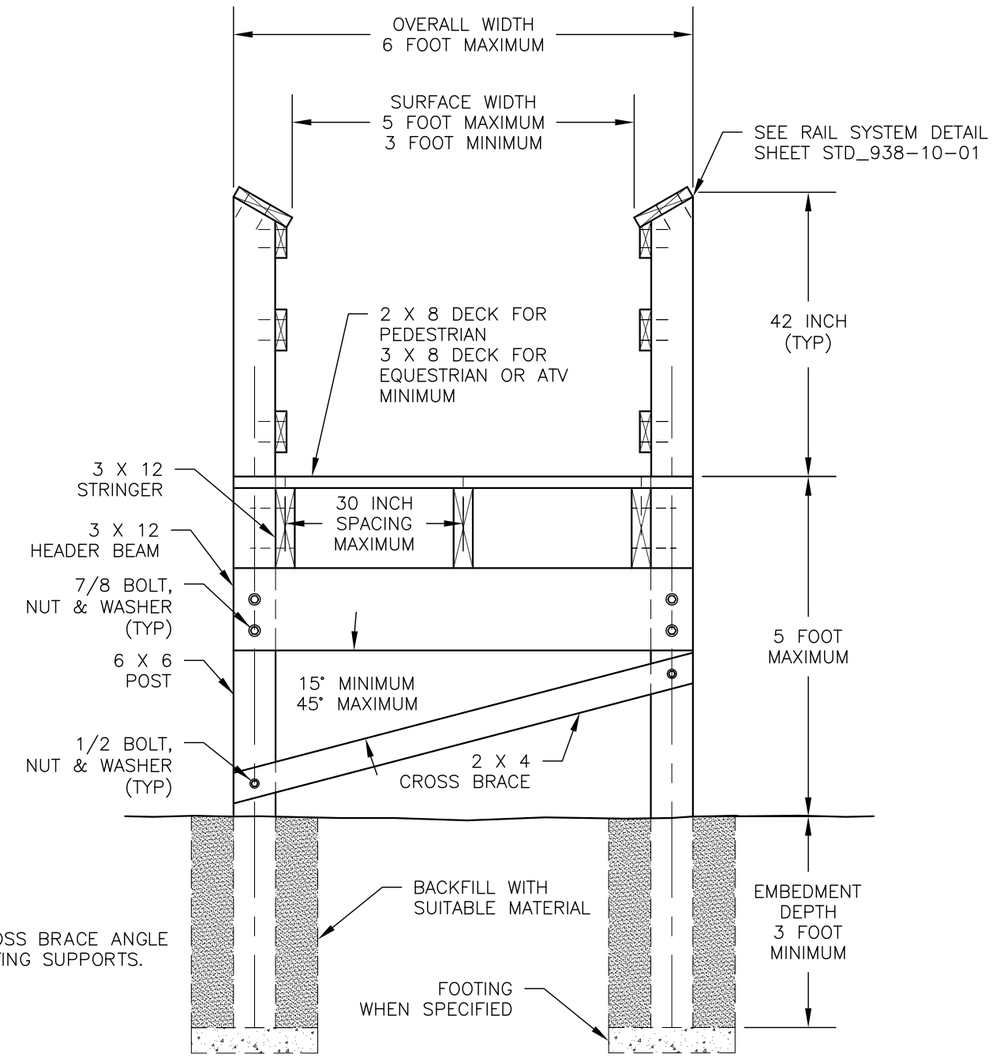

NOTE:
REVERSE CROSS BRACE ANGLE AT ALTERNATING SUPPORTS.

D TYPICAL ELEVATED SECTION

GREATER THAN 3 FEET LESS THAN 5 FEET BLOCKING REQUIRED AT EVERY SUPPORT NOT SHOWN FOR CLARITY

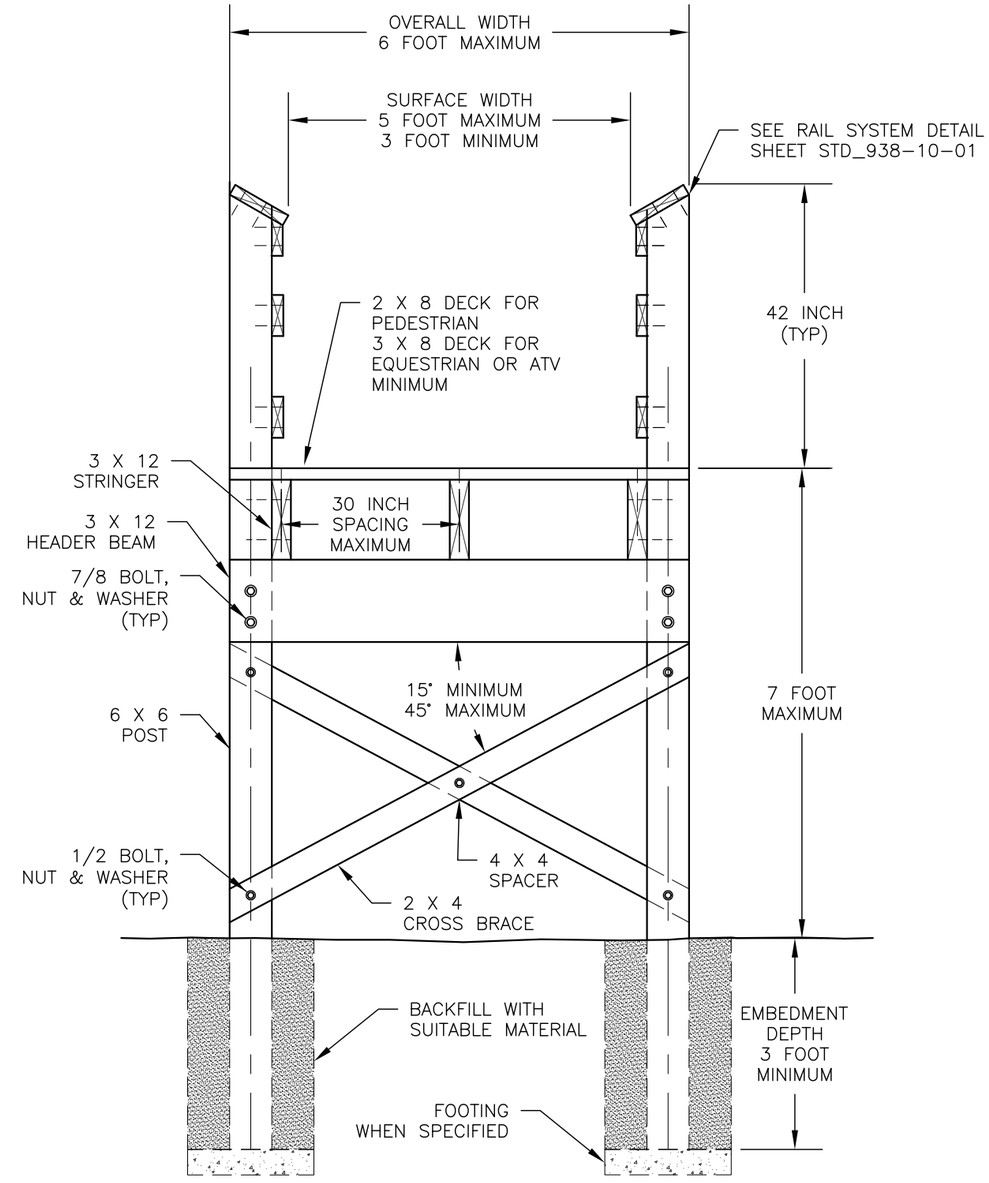

E TYPICAL ELEVATED SECTION

GREATER THAN 5 FEET LESS THAN 7 FEET BLOCKING REQUIRED AT EVERY SUPPORT NOT SHOWN FOR CLARITY

U.S. DEPARTMENT OF AGRICULTURE
FOREST SERVICE
STANDARD TRAIL PLAN

PROJECT NAME & LOCATION

DRAWING NAME
ELEVATED BOARDWALK

SECTION
938 - BOARDWALKS

TYPICAL ID
EB3

REVISION DATE
XX/XX/XX

NO SCALE

DRAWING NO.
STD_938-20-03

SHEET
OF

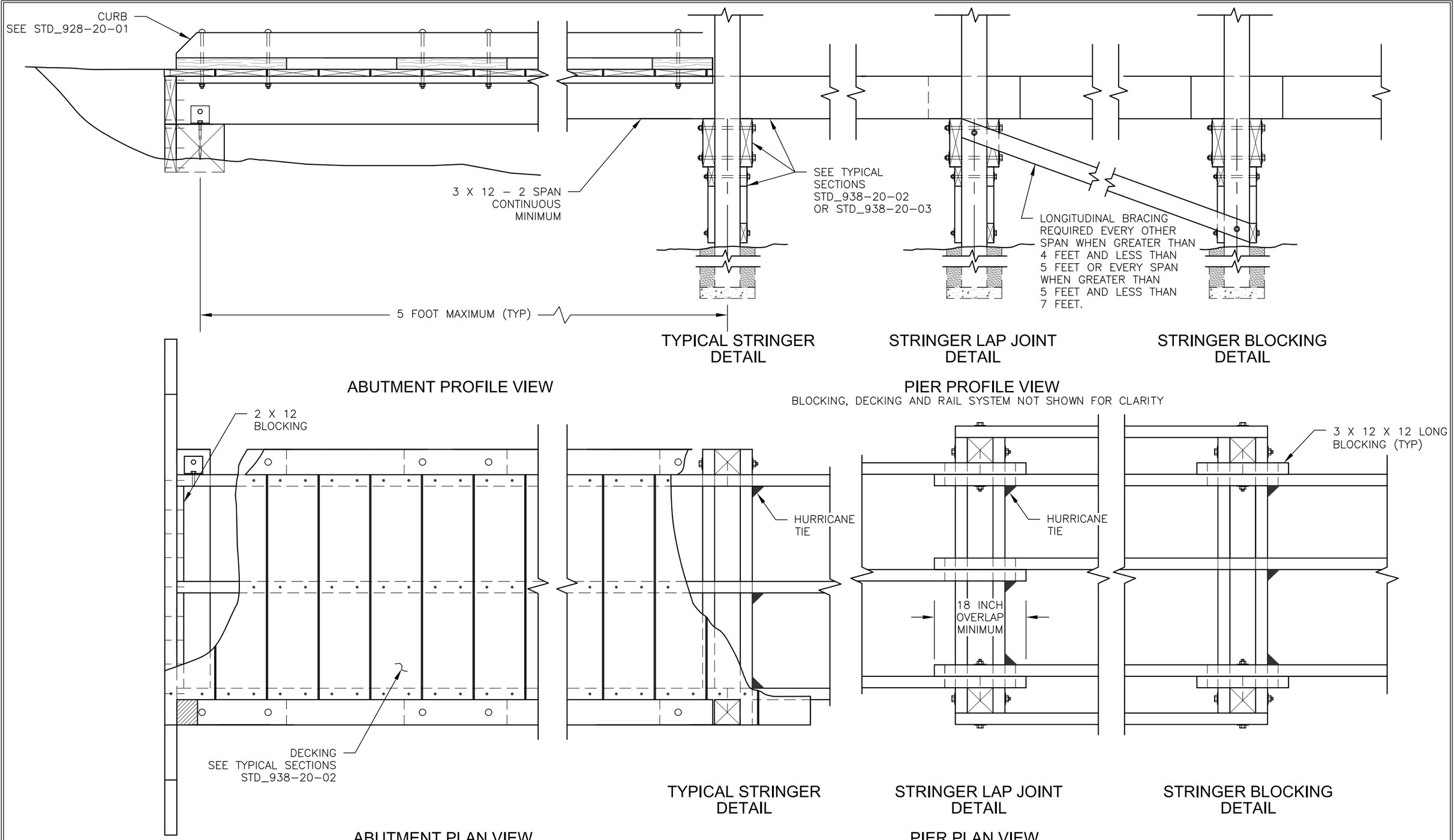

SHEET 4 OF 4

U.S. DEPARTMENT OF AGRICULTURE
FOREST SERVICE

STANDARD TRAIL PLAN

PROJECT NAME & LOCATION

DRAWING NAME
ELEVATED BOARDWALK

SECTION
938 - BOARDWALKS

TYPICAL ID
EB4

REVISION DATE
XX/XX/XX

NO SCALE

DRAWING NO.
STD_938-20-04

SHEET
OF

STRUCTURE NUMBER	TRAIL NO.	BRIDGE LOCATION	BRIDGE LENGTH OUT–TO–OUT	STRINGER SPAN ℄–℄ BRNG	BRIDGE CLEAR WIDTH	PEDESTRIAN LOAD	GROUND SNOW LOAD	STRINGERS					DECK			BACKWALL					
								SPECIES	NUMBER	MATERIAL SIZE	TREATMENT		SPECIES	SIZE	TREATMENT	TYPE	SPECIES	SIZE	WIDTH	HEIGHT	TREATMENT
											YES	NO									

NA = NOT APPLICABLE

STRUCTURE NUMBER	RAILING SYSTEM/CURB						RUNNING PLANK					SILL			APPROACHES						HARDWARE	COMMENTS
	SPECIES	TYPE	HEIGHT	MATERIAL TYPE	TREATMENT		SPECIES	SIZE	WIDTH	TREATMENT		TYPE	SIZE	TREATMENT	LENGTH		WIDTH	MATERIAL TYPE	MATERIAL DEPTH	GEO–SYNTHETIC TYPE	COATINGS	
					YES	NO				YES	NO				NEAR	FAR						
X																						

ABUTMENT MATERIAL TYPE: SS = SOLID SAWN, GLU = GLULAM, CONC = CONCRETE
HARDWARE COATING TYPE: GALV = GALVANIZED, UNC = UNCOATED, WEA = WEATHERING STEEL

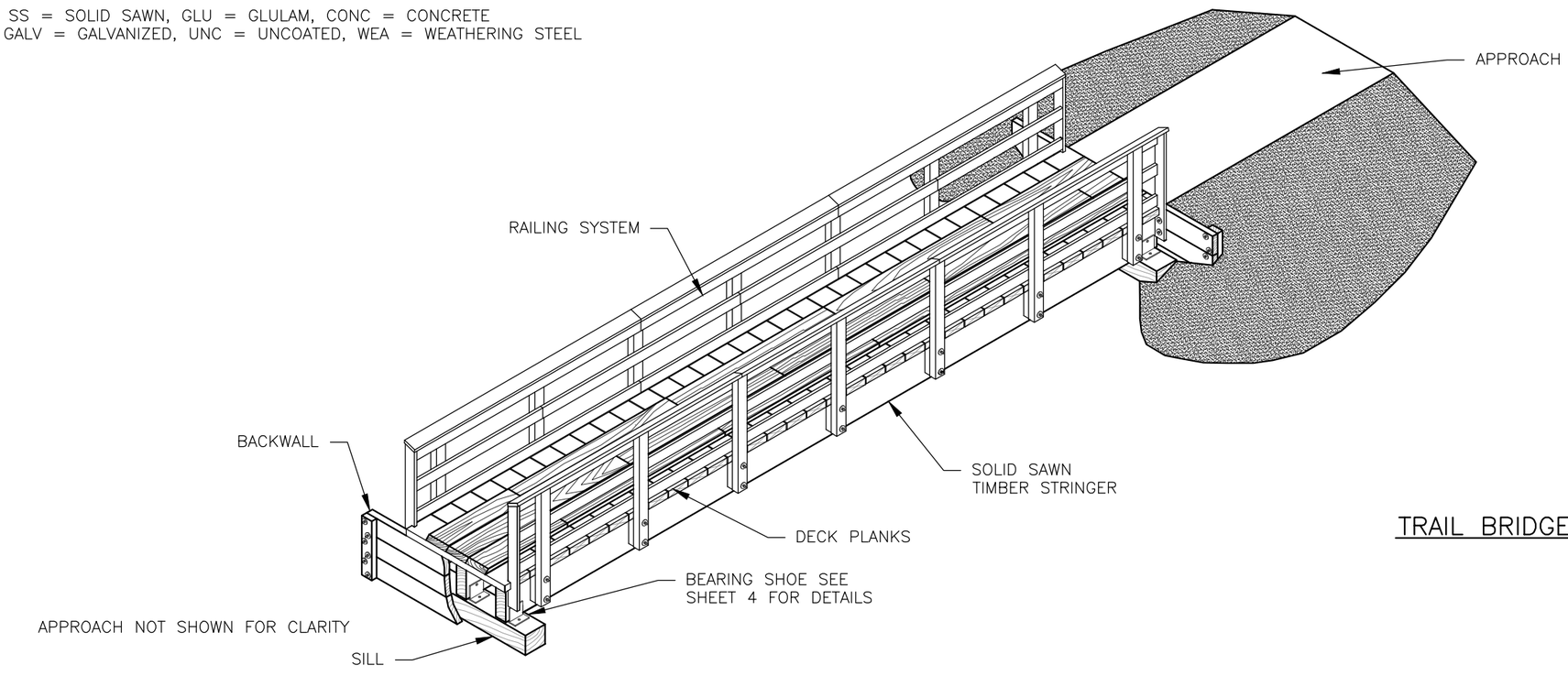

TRAIL BRIDGE W/RAILING SYSTEM

U.S. DEPARTMENT OF AGRICULTURE
FOREST SERVICE

STANDARD TRAIL PLAN

PROJECT NAME & LOCATION

DRAWING NAME
SAWN TIMBER STRINGER TRAIL BRIDGE

SECTION
962 - SAWN TIMBER TRAIL BRIDGE

TYPICAL ID
STS

REVISION DATE

NOT TO SCALE

DRAWING NO.
STD_962-10-01

SHEET
OF

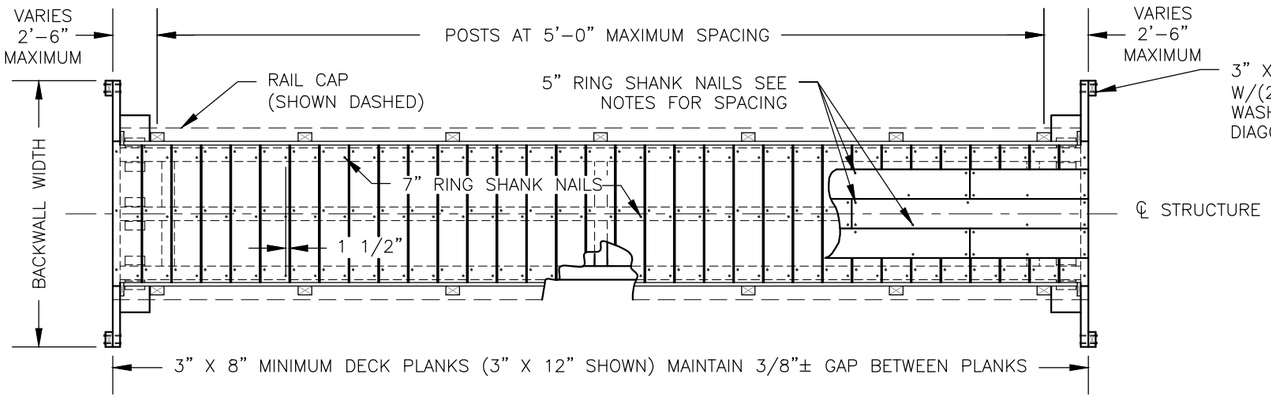

PLAN

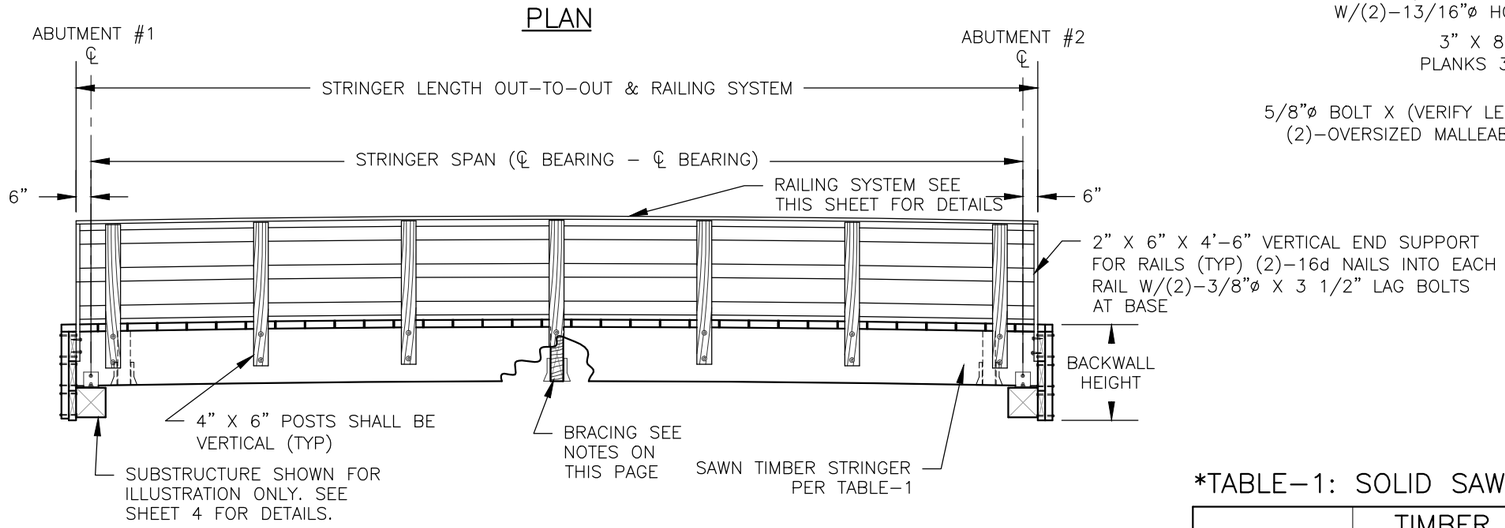

ELEVATION

GRADE SHOWN = 0.0%, RUNNING PLANKS NOT SHOWN FOR CLARITY

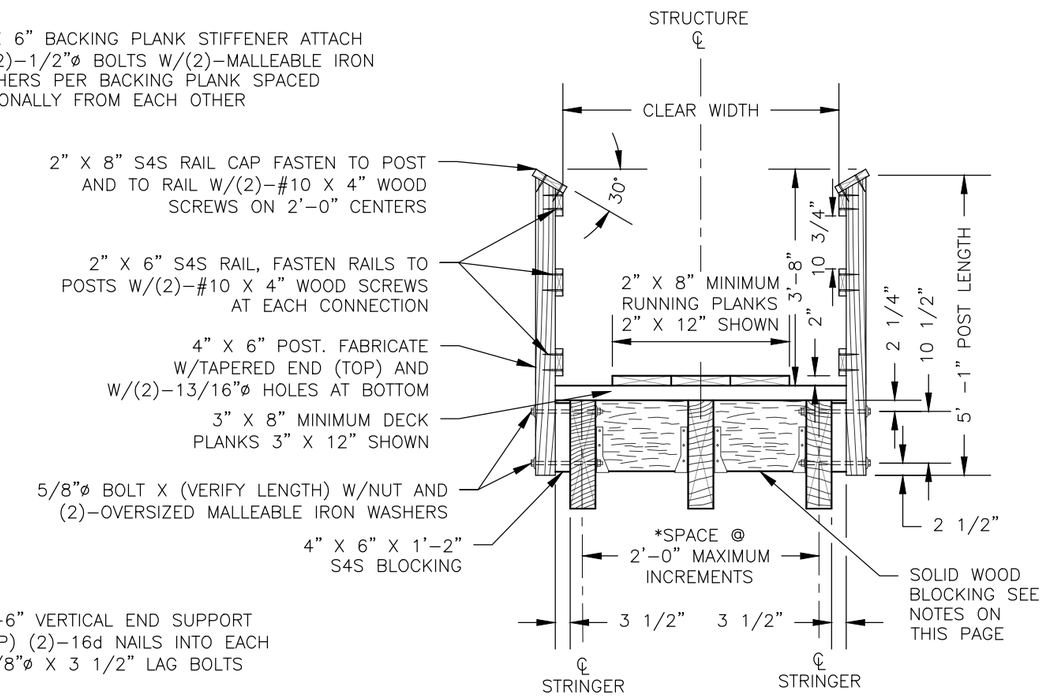

TYPICAL DECK SECTION W/RAILING SYSTEM

NOTES:

1. ALL DIMENSIONS IN TABLE-1 ARE NOMINAL (ROUGH SAWN). THE MINIMUM STRINGER DEPTH FOR BRIDGES WITH A PEDESTRIAN RAILING SYSTEM IS 15-INCHES. BRIDGES WITH STRINGER DEPTHS LESS THAN 15-INCHES SHALL HAVE CURBS ONLY. THE MINIMUM NUMBER OF STRINGERS IS THREE.
2. FASTEN DECK PLANKS TO STRINGERS WITH TWO ROWS 5/16-INCH DIAMETER X 7-INCH RING SHANK NAILS PER PLANK AT EACH STRINGER. ALTERNATE SIDES.
3. FASTEN RUNNING PLANKS TO DECK WITH 40d (5-INCH RING SHANK) NAILS AT 24-INCH SPACING. ALTERNATE SIDES WITH TWO AT EACH END.
4. PROVIDE A MINIMUM 1/2-INCH SPACE BETWEEN BLOCKING AND BACKWALL FOR AIR CIRCULATION.
5. SPLICE RAILS AT POSTS. RAILS SHALL BE CONTINUOUS FOR TWO POST SPACES. DO NOT LOCATE MORE THAN ONE RAIL SPLICE AT ANY ONE POST.
6. BRACING REQUIRED AT THE ENDS OF EACH MEMBER. THE BRACING SHALL BE THREE-QUARTERS TO FULL DEPTH AND PLACED WITHIN A DISTANCE OF THE DEPTH OF THE BEAM FROM THE CENTERLINE OF BEARING. BRACING REQUIRED AT MID-SPAN FOR SPANS OVER 20 FEET LONG.
7. WOOD BLOCKING SHALL BE BOLTED TO STRINGERS WITH STEEL ANGLES OR SUSPENDED IN STEEL HANGERS THAT ARE NAILED TO BLOCKS AND STRINGER SIDES

*TABLE-1: SOLID SAWN STRINGER SIZE REQUIREMENTS - LRFD

**STRINGER SPAN (FEET)	TIMBER SPECIES - DOUGLAS FIR - LARCH GRADE - NO.1				
	DESIGN LOADING IN POUNDS PER SQUARE FOOT				
	PEDESTRIAN LIVE LOAD		GROUND SNOW LOAD		
	***65	90	120	150	200
●10	3" X 8"	3" X 10"	3" X 12"	4" X 10"	4" X 12"
●15	4" X 10"	4" X 12"	4" X 14"	4" X 16"	6" X 12"
●20	4" X 14"	6" X 12"	6" X 12"	6" X 14"	6" X 16"
▲25	6" X 14"	6" X 14"	6" X 16"	6" X 18"	6" X 20"
▲30	6" X 16"	6" X 18"	6" X 20"	6" X 20"	8" X 20"

●INSTALL BRACING WITHIN A DISTANCE OF THE DEPTH OF THE BEAM FROM THE CENTERLINE OF BEARING
▲INSTALL BRACING WITHIN A DISTANCE OF THE DEPTH OF THE BEAM FROM THE CENTERLINE OF BEARING & MID-SPAN
* STRINGER SIZE SHALL BE THE LARGER OF THE PEDESTRIAN OR GROUND SHOW LOAD SIZE REQUIRED FOR THE SITE CONDITIONS
** STRINGER LENGTH EQUAL TO STRINGER SPAN PLUS ONE FOOT
*** REQUIRES REGIONAL BRIDGE ENGINEER APPROVAL

U.S. DEPARTMENT OF AGRICULTURE
FOREST SERVICE
STANDARD TRAIL PLAN

PROJECT NAME & LOCATION

DRAWING NAME
SAWN TIMBER STRINGER TRAIL BRIDGE
SECTION
962 - SAWN TIMBER TRAIL BRIDGE
TYPICAL ID
STS

REVISION DATE
NOT TO SCALE

DRAWING NO.
STD_962-10-02a
SHEET
OF

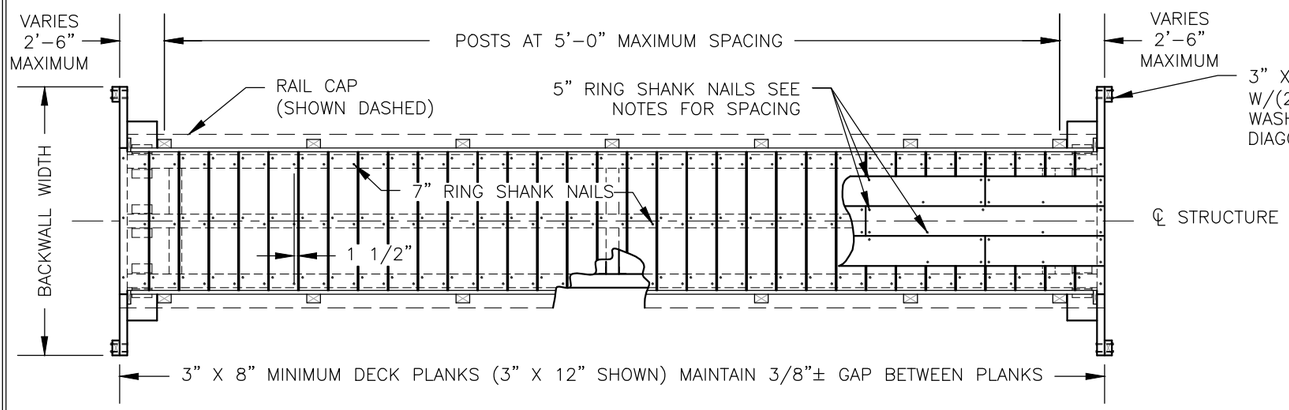

PLAN

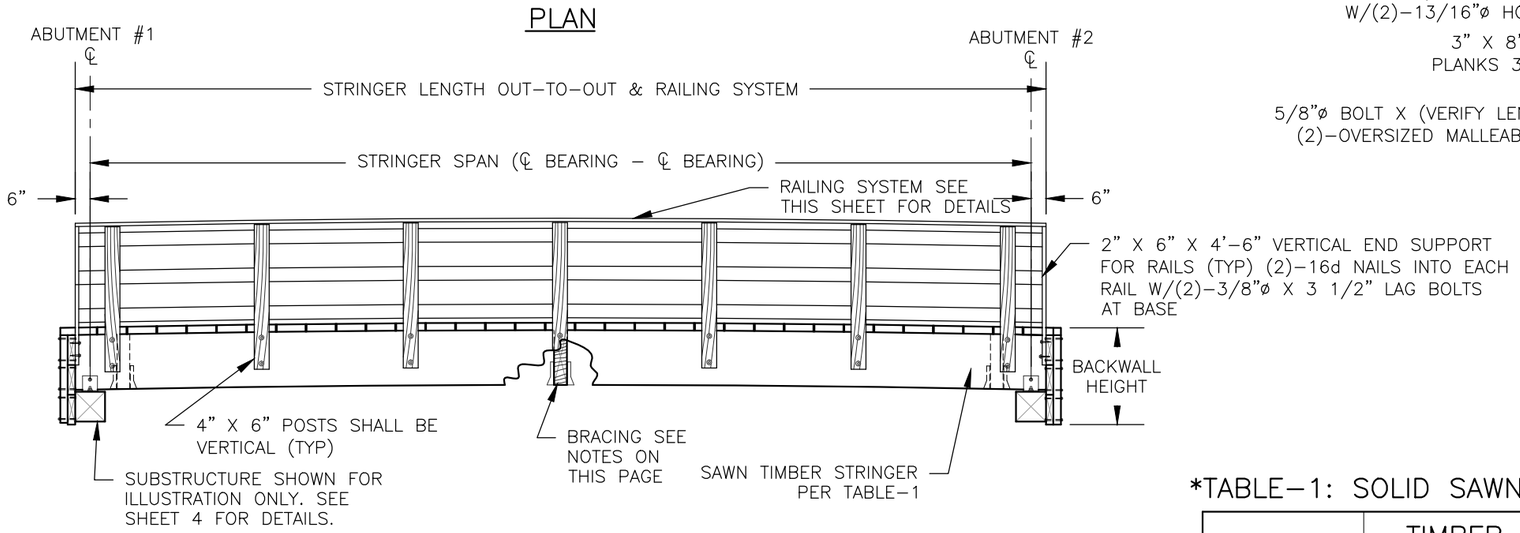

ELEVATION

GRADE SHOWN = 0.0%, RUNNING PLANKS NOT SHOWN FOR CLARITY

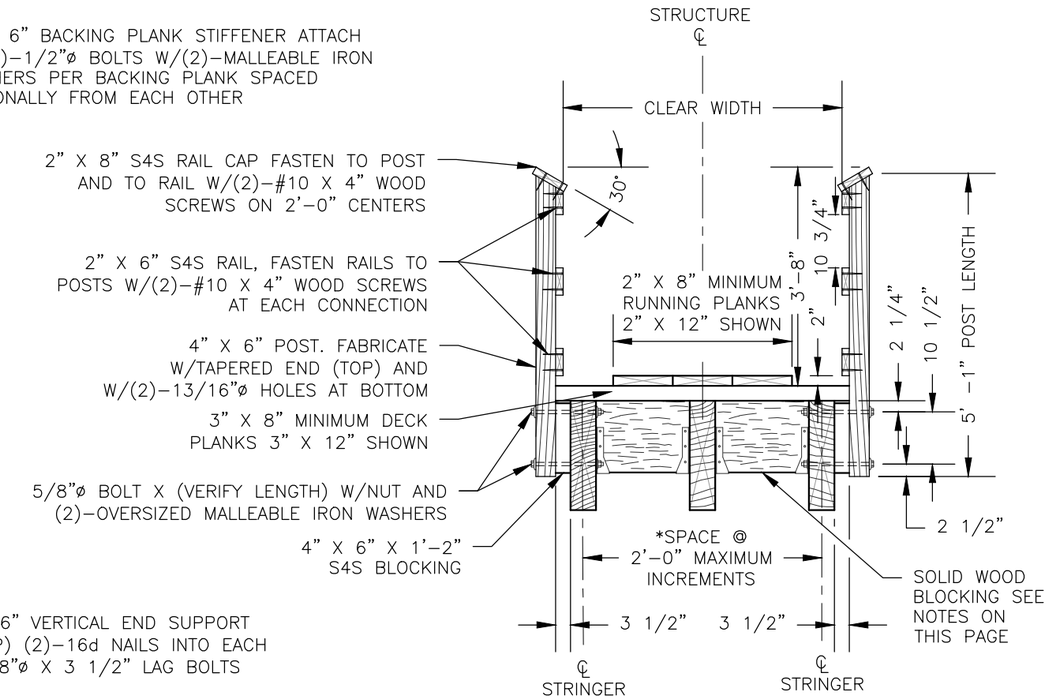

TYPICAL DECK SECTION W/RAILING SYSTEM

*TABLE-1: SOLID SAWN STRINGER SIZE REQUIREMENTS - LRFD

**STRINGER SPAN (FEET)	TIMBER SPECIES - SOUTHERN PINE GRADE - NO.1				
	DESIGN LOADING IN POUNDS PER SQUARE FOOT				
	PEDESTRIAN LIVE LOAD		GROUND SNOW LOAD		
	***65	90	120	150	200
●10	3" X 8"	3" X 10"	3" X 10"	3" X 12"	4" X 12"
●15	4" X 10"	4" X 12"	4" X 14"	4" X 16"	6" X 12"
●20	4" X 14"	4" X 16"	6" X 12"	6" X 14"	6" X 16"
▲25	6" X 14"	6" X 16"	6" X 16"	6" X 16"	6" X 20"
▲30	6" X 16"	6" X 18"	6" X 18"	6" X 20"	8" X 20"

●INSTALL BRACING WITHIN A DISTANCE OF THE DEPTH OF THE BEAM FROM THE CENTERLINE OF BEARING
▲INSTALL BRACING WITHIN A DISTANCE OF THE DEPTH OF THE BEAM FROM THE CENTERLINE OF BEARING & MID-SPAN
* STRINGER SIZE SHALL BE THE LARGER OF THE PEDESTRIAN OR GROUND SHOW LOAD SIZE REQUIRED FOR THE SITE CONDITIONS
** STRINGER LENGTH EQUAL TO STRINGER SPAN PLUS ONE FOOT
*** REQUIRES REGIONAL BRIDGE ENGINEER APPROVAL

NOTES:

1. ALL DIMENSIONS IN TABLE-1 ARE NOMINAL (ROUGH SAWN). THE MINIMUM STRINGER DEPTH FOR BRIDGES WITH A PEDESTRIAN RAILING SYSTEM IS 15-INCHES. BRIDGES WITH STRINGER DEPTHS LESS THAN 15-INCHES SHALL HAVE CURBS ONLY. THE MINIMUM NUMBER OF STRINGERS IS THREE.
2. FASTEN DECK PLANKS TO STRINGERS WITH TWO ROWS 5/16-INCH DIAMETER X 7-INCH RING SHANK NAILS PER PLANK AT EACH STRINGER. ALTERNATE SIDES.
3. FASTEN RUNNING PLANKS TO DECK WITH 40d (5-INCH RING SHANK) NAILS AT 24-INCH SPACING. ALTERNATE SIDES WITH TWO AT EACH END.
4. PROVIDE A MINIMUM 1/2-INCH SPACE BETWEEN BLOCKING AND BACKWALL FOR AIR CIRCULATION.
5. SPLICE RAILS AT POSTS. RAILS SHALL BE CONTINUOUS FOR TWO POST SPACES. DO NOT LOCATE MORE THAN ONE RAIL SPLICE AT ANY ONE POST.
6. BRACING REQUIRED AT THE ENDS OF EACH MEMBER. THE BRACING SHALL BE THREE-QUARTERS TO FULL DEPTH AND PLACED WITHIN A DISTANCE OF THE DEPTH OF THE BEAM FROM THE CENTERLINE OF BEARING. BRACING REQUIRED AT MID-SPAN FOR SPANS OVER 20 FEET LONG.
7. WOOD BLOCKING SHALL BE BOLTED TO STRINGERS WITH STEEL ANGLES OR SUSPENDED IN STEEL HANGERS THAT ARE NAILED TO BLOCKS AND STRINGER SIDES

U.S. DEPARTMENT OF AGRICULTURE
FOREST SERVICE
STANDARD TRAIL PLAN

PROJECT NAME & LOCATION

DRAWING NAME
SAWN TIMBER STRINGER TRAIL BRIDGE

SECTION
962 - SAWN TIMBER TRAIL BRIDGE

TYPICAL ID
STS

REVISION DATE

NOT TO SCALE

DRAWING NO.
STD_962-10-02b

SHEET OF

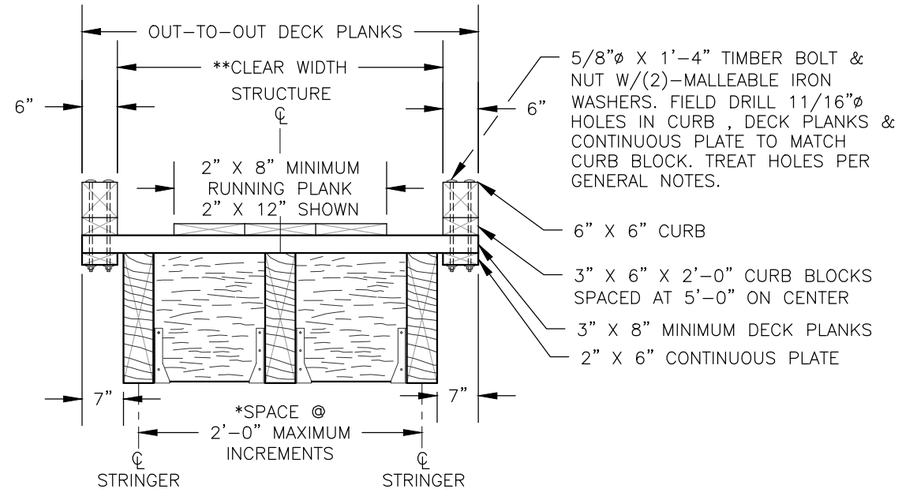

BRIDGE WITH CURBS ONLY
DECK SECTION W/STRINGERS @2'-0" O.C.

* MINIMUM NUMBER OF STRINGERS IS THREE
** INSIDE FACE TO INSIDE FACE OF RAILING SYSTEM

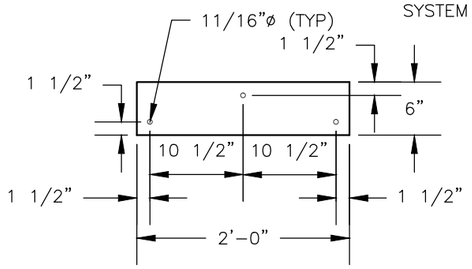

PLAN-CURB BLOCK

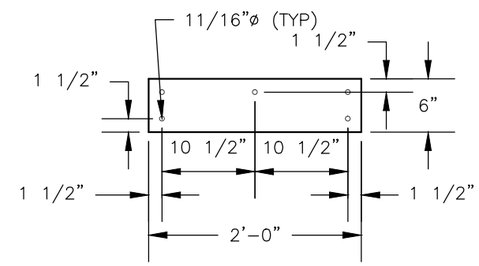

PLAN-CURB BLOCK AT SPLICE

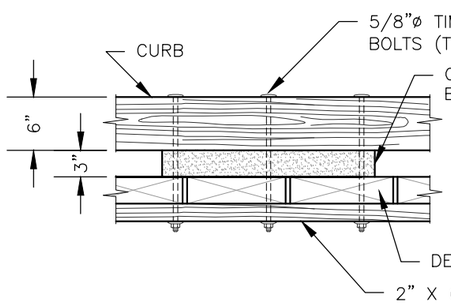

ELEVATION-TYPICAL CONNECTION

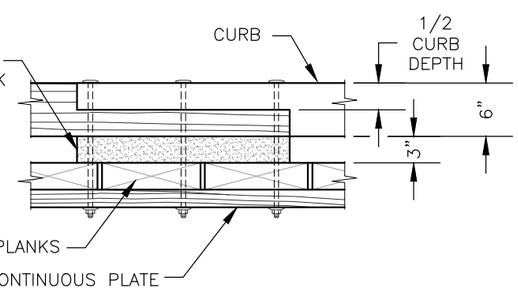

ELEVATION-CONNECTION AT SPLICE

SOLID SAWN CURB CONNECTION DETAILS

GENERAL NOTES:

SPECIFICATIONS: MATERIALS AND CONSTRUCTION OF THIS STRUCTURE SHALL BE IN ACCORDANCE WITH THE STANDARD SPECIFICATION FOR CONSTRUCTION OF ROADS AND BRIDGES ON FEDERAL HIGHWAY PROJECTS (FP-03) AND STANDARD SPECIFICATIONS FOR CONSTRUCTION OF TRAILS AND TRAIL BRIDGES ON FEDERAL PROJECTS,

TIMBER & LUMBER: SOLID SAWN TIMBER MEMBERS SHALL CONFORM TO THE REQUIREMENTS OF THE GRADING RULES AGENCY FOR THE SPECIES, TYPE, AND GRADE SPECIFIED BELOW.

DECK PLANKS, CURBS, SILLS, & BACKING PLANKS
- COASTAL REGION DOUGLAS FIR-LARCH ROUGH SAWN NO.1 GRADE, GRADING RULES AGENCY - WWPA, WCLIB

RUNNING PLANKS
- COASTAL REGION DOUGLAS FIR-LARCH ROUGH SAWN NO.2 GRADE, GRADING RULES AGENCY - WWPA, WCLIB

RAILS & POSTS (SEE PROJECT CRITERIA)

UNTREATED
- REDWOOD, S4S, NO.1 GRADE GRADING RULES AGENCY - RIS
- WESTERN RED CEDAR, S4S, SELECT STRUCTURAL GRADE GRADING RULES AGENCY - WWPA, WCLIB

TREATED
- HEM-FIR/DOUGLAS FIR, S4S, NO.1 GRADE GRADING RULES AGENCY - WWPA, WCLIB

TREATMENT: SEE PROJECT CRITERIA FOR MEMBERS IDENTIFIED TO BE TREATED AND FOR TREATMENT TYPE. PRESERVATIVE TREATMENT SHALL BE IN ACCORDANCE WITH THE CURRENT AMERICAN WOOD PROTECTION ASSOCIATION (AWPA) SPECIFICATIONS USING THE TREATMENT MATERIALS LISTED BELOW. TREATMENT WILL COMPLY WITH THE REQUIREMENTS OF THE CURRENT EDITION OF WESTERN WOOD PRESERVERS INSTITUTE (WWPI) "BEST MANAGEMENT PRACTICES FOR THE USE OF TREATED WOOD IN AQUATIC ENVIRONMENTS".

STRINGERS, DECKING, RUNNING PLANKS, & RAILING SYSTEM, IF TREATED
- AWPA USE CATEGORY SYSTEM (U1) FOR USE CATEGORY 3B ABOVE GROUND-EXPOSED (UC3B)
- PENTACHLOROPHENOL IN LIGHT OIL (TYPE C SOLVENT)
- COPPER NAPHTHENATE (CuN) IN LIGHT OIL (TYPE C SOLVENT)

SILLS, BACKING PLANKS, CRIBS, & TIMBER WALLS, IF TREATED
- AWPA USE CATEGORY SYSTEM (U1) FOR USE CATEGORY 4B GROUND CONTACT-HEAVY DUTY (UC4B)
- PENTACHLOROPHENOL IN HEAVY OIL (TYPE A SOLVENT)
- COPPER NAPHTHENATE (CuN) IN HEAVY OIL (TYPE A SOLVENT)

FIELD TREATMENT: COPPER NAPHTHENATE (2% SOLUTION) SHALL BE FURNISHED FOR FIELD TREATING OD WOOD. ALL ABRASIONS AND FIELD CUTS -APPROVED BY THE C.O.R.- SHALL BE CAREFULLY TRIMMED AND GIVEN THREE BRUSH COATS OF THE FIELD TREATMENT SOLUTION. WHERE APPROVED FIELD DRILLING OF BOLT OR NAIL HOLES IS REQUIRED, THE HOLES SHALL BE FILLED WITH PRESERVATIVE PRIOR TO INSERTING THE FASTENERS.

HARDWARE AND STRUCTURAL STEEL: SEE PROJECT DESIGN CRITERIA FOR STEEL HARDWARE FINISH. GALVANIZED OR UNFINISHED HARDWARE SHALL MEET THE REQUIREMENTS OF AASHTO M270, GRADE 36, WITH NUTS AND BOLTS CONFORMING TO ASTM A307, GRADE A. WEATHERING STEEL AND HARDWARE SHALL MEET THE REQUIREMENTS OF AASHTO M270, GRADE 50W, WITH BOLTS AND NUTS CONFORMING TO ASTM A325, TYPE 3. USE MALLEABLE IRON WASHERS AGAINST WOOD UNLESS OTHERWISE NOTED.

WHEN STRUCTURAL STEEL IS TO BE WELDED, THE WELDING PROCEDURE SHALL BE IN ACCORDANCE WITH AWS D1.1 AND SHALL BE SUITABLE FOR THE GRADE OF STEEL AND INTENDED USE OR SERVICE.

FABRICATION: SUBMIT SHOP DRAWINGS FOR ALL BRIDGE COMPONENTS (EXCEPT TIMBER RUNNING PLANKS). SHOW ALL DIMENSIONS AND FABRICATION DETAILS FOR ALL CUT OR BORED TIMBER. FIELD DRILLING OF HOLES SHALL NOT BE ALLOWED UNLESS OTHERWISE NOTED ON THE PLANS.

U.S. DEPARTMENT OF AGRICULTURE
FOREST SERVICE
STANDARD TRAIL PLAN

PROJECT NAME & LOCATION

DRAWING NAME
SAWN TIMBER STRINGER TRAIL BRIDGE

SECTION
962 - SAWN TIMBER TRAIL BRIDGE

TYPICAL ID
STS

REVISION DATE

NOT TO SCALE

DRAWING NO.
STD_962-10-03a

SHEET
X OF

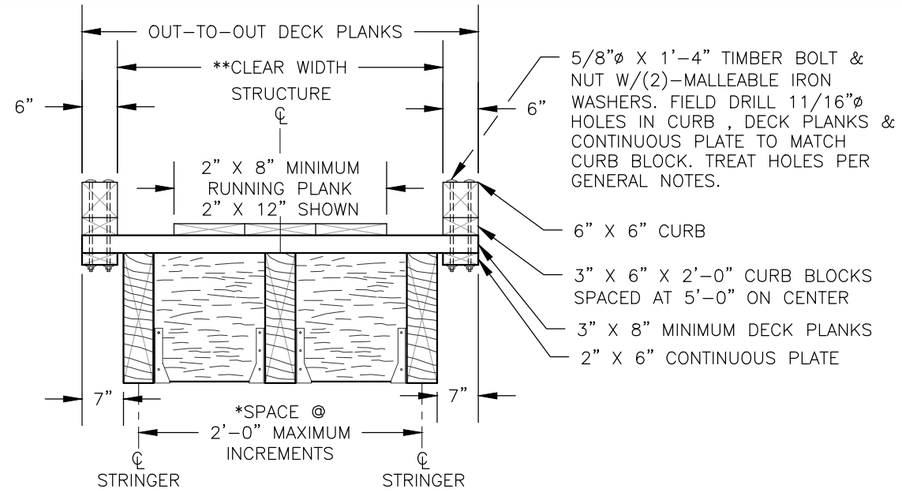

BRIDGE WITH CURBS ONLY
DECK SECTION W/STRINGERS @2'–0" O.C.

* MINIMUM NUMBER OF STRINGERS IS THREE
** INSIDE FACE TO INSIDE FACE OF RAILING SYSTEM

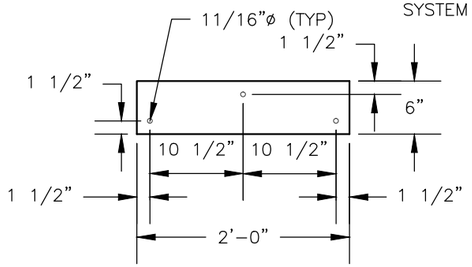

PLAN–CURB BLOCK

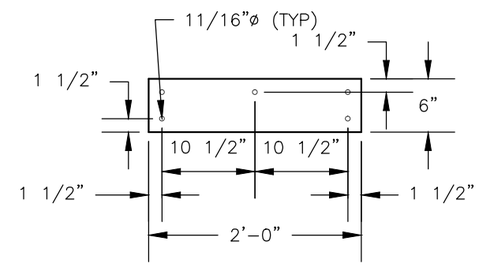

PLAN–CURB BLOCK AT SPLICE

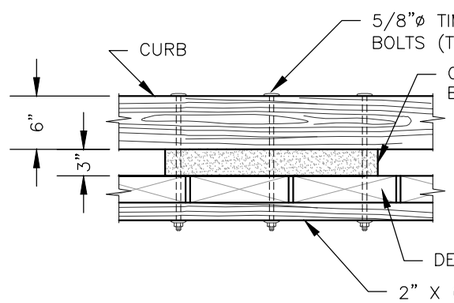

ELEVATION–TYPICAL CONNECTION

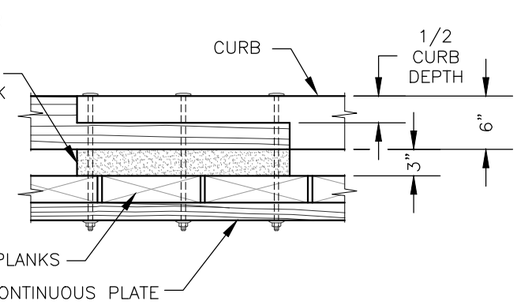

ELEVATION–CONNECTION AT SPLICE

SOLID SAWN CURB CONNECTION DETAILS

GENERAL NOTES:

SPECIFICATIONS: MATERIALS AND CONSTRUCTION OF THIS STRUCTURE SHALL BE IN ACCORDANCE WITH THE STANDARD SPECIFICATION FOR CONSTRUCTION OF ROADS AND BRIDGES ON FEDERAL HIGHWAY PROJECTS (FP–03) AND STANDARD SPECIFICATIONS FOR CONSTRUCTION OF TRAILS AND TRAIL BRIDGES ON FEDERAL PROJECTS,

TIMBER & LUMBER: SOLID SAWN TIMBER MEMBERS SHALL CONFORM TO THE REQUIREMENTS OF THE GRADING RULES AGENCY FOR THE SPECIES, TYPE, AND GRADE SPECIFIED BELOW.

DECK PLANKS, CURBS, SILLS, & BACKING PLANKS RUNNING PLANKS
- SOUTHERN PINE NO.2 GRADE GRADING RULES AGENCY – SPIB
- SOUTHERN PINE NO.2 GRADE GRADING RULES AGENCY – SPIB

RAILS & POSTS (SEE PROJECT CRITERIA)

UNTREATED
- BALDCYPRESS, S4S, NO.1 GRADE GRADING RULES AGENCY – SPIB
- WHITE OAK, S4S, SELECT STRUCTURAL GRADE GRADING RULES AGENCY – NELMA

TREATED
- SOUTHERN PINE, S4S, NO.1 GRADE GRADING RULES AGENCY – SPIB

TREATMENT: SEE PROJECT CRITERIA FOR MEMBERS IDENTIFIED TO BE TREATED AND FOR TREATMENT TYPE. PRESERVATIVE TREATMENT SHALL BE IN ACCORDANCE WITH THE CURRENT AMERICAN WOOD PROTECTION ASSOCIATION (AWPA) SPECIFICATIONS USING THE TREATMENT MATERIALS LISTED BELOW. TREATMENT WILL COMPLY WITH THE REQUIREMENTS OF THE CURRENT EDITION OF WESTERN WOOD PRESERVERS INSTITUTE (WWPI) "BEST MANAGEMENT PRACTICES FOR THE USE OF TREATED WOOD IN AQUATIC ENVIRONMENTS".

STRINGERS, DECKING, RUNNING PLANKS, & RAILING SYSTEM, IF TREATED
- AWPA USE CATEGORY SYSTEM (U1) FOR USE CATEGORY 3B ABOVE GROUND–EXPOSED (UC3B)
- PENTACHLOROPHENOL IN LIGHT OIL (TYPE C SOLVENT)
- COPPER NAPHTHENATE (CuN) IN LIGHT OIL (TYPE C SOLVENT)

SILLS, BACKING PLANKS, CRIBS, & TIMBER WALLS, IF TREATED
- AWPA USE CATEGORY SYSTEM (U1) FOR USE CATEGORY 4B GROUND CONTACT–HEAVY DUTY (UC4B)
- PENTACHLOROPHENOL IN HEAVY OIL (TYPE A SOLVENT)
- COPPER NAPHTHENATE (CuN) IN HEAVY OIL (TYPE A SOLVENT)

FIELD TREATMENT: COPPER NAPHTHENATE (2% SOLUTION) SHALL BE FURNISHED FOR FIELD TREATING OD WOOD. ALL ABRASIONS AND FIELD CUTS –APPROVED BY THE C.O.R.– SHALL BE CAREFULLY TRIMMED AND GIVEN THREE BRUSH COATS OF THE FIELD TREATMENT SOLUTION. WHERE APPROVED FIELD DRILLING OF BOLT OR NAIL HOLES IS REQUIRED, THE HOLES SHALL BE FILLED WITH PRESERVATIVE PRIOR TO INSERTING THE FASTENERS.

HARDWARE AND STRUCTURAL STEEL: SEE PROJECT DESIGN CRITERIA FOR STEEL HARDWARE FINISH. GALVANIZED OR UNFINISHED HARDWARE SHALL MEET THE REQUIREMENTS OF AASHTO M270, GRADE 36, WITH NUTS AND BOLTS CONFORMING TO ASTM A307, GRADE A. WEATHERING STEEL AND HARDWARE SHALL MEET THE REQUIREMENTS OF AASHTO M270, GRADE 50W, WITH BOLTS AND NUTS CONFORMING TO ASTM A325, TYPE 3. USE MALLEABLE IRON WASHERS AGAINST WOOD UNLESS OTHERWISE NOTED.

WHEN STRUCTURAL STEEL IS TO BE WELDED, THE WELDING PROCEDURE SHALL BE IN ACCORDANCE WITH AWS D1.1 AND SHALL BE SUITABLE FOR THE GRADE OF STEEL AND INTENDED USE OR SERVICE.

FABRICATION: SUBMIT SHOP DRAWINGS FOR ALL BRIDGE COMPONENTS (EXCEPT TIMBER RUNNING PLANKS). SHOW ALL DIMENSIONS AND FABRICATION DETAILS FOR ALL CUT OR BORED TIMBER. FIELD DRILLING OF HOLES SHALL NOT BE ALLOWED UNLESS OTHERWISE NOTED ON THE PLANS.

U.S. DEPARTMENT OF AGRICULTURE
FOREST SERVICE
STANDARD TRAIL PLAN

PROJECT NAME & LOCATION

DRAWING NAME
SAWN TIMBER STRINGER TRAIL BRIDGE

SECTION
962 - SAWN TIMBER TRAIL BRIDGE

TYPICAL ID
STS

REVISION DATE

NOT TO SCALE

DRAWING NO.
STD_962-10-03b

SHEET
OF

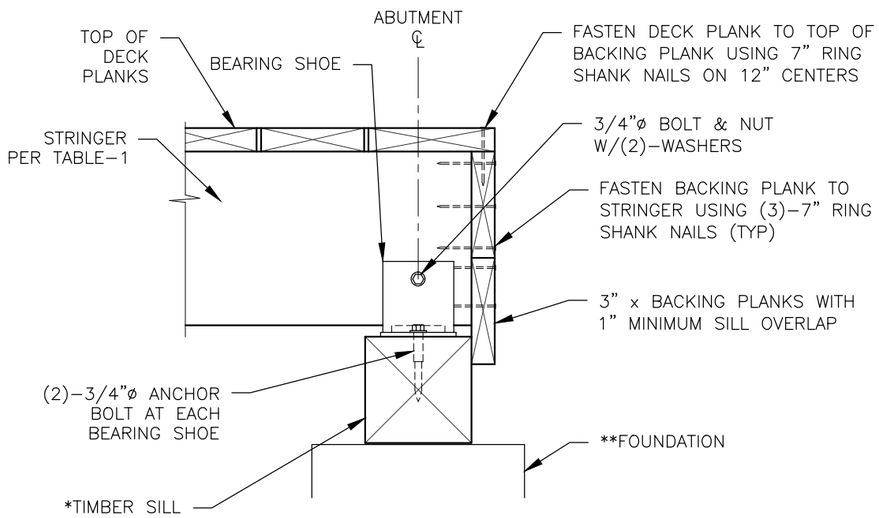

GLU-LAM/SAWN TIMBER SILL CONNECTION DETAIL

BACKING PLANK STIFFENER NOT SHOWN FOR CLARITY

** TIMBER SILL CAN BE EITHER 12" X 12" SOLID SAWN 10 3/4" X 12" GLUE-LAMINATED, BUILT-UP 3" X 12", 4" X 12", & 6" X 12" TREATED MEMBERS.

** SEE STANDARD DRAWINGS 965-10, 965-20, 965-30, & 965-40 FOR FOUNDATION ALTERNATIVES

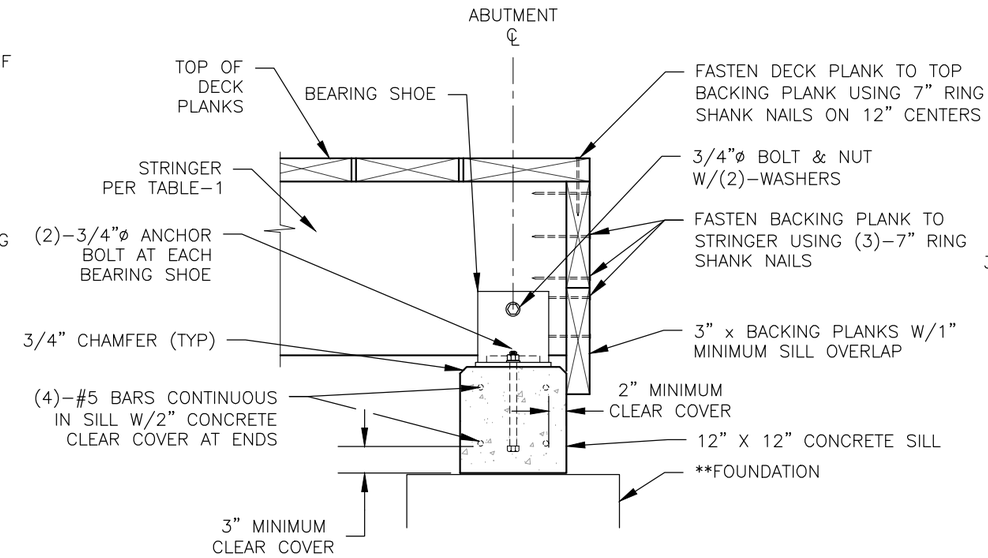

CONCRETE SILL CONNECTION DETAIL

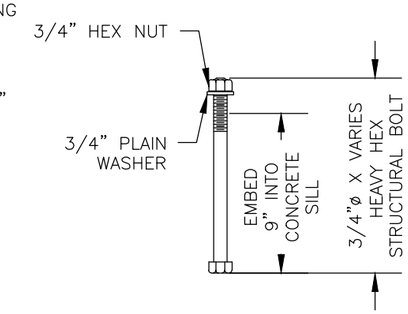

CONCRETE SILL ANCHOR BOLT DETAIL

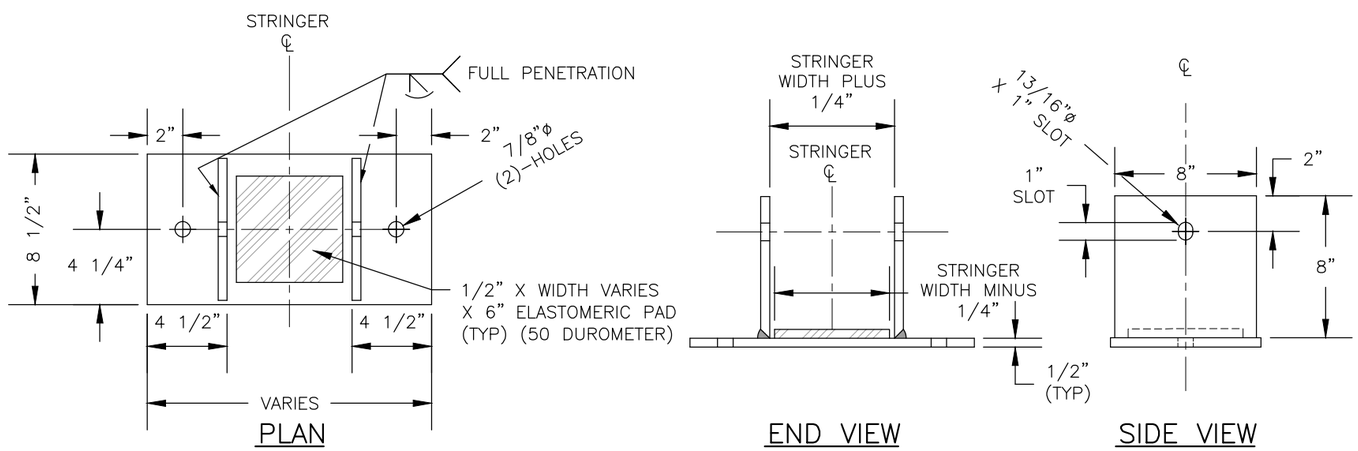

BEARING SHOE DETAIL

MATERIAL = 1/2" STEEL PLATE A36

NOTES:

SPECIFICATIONS: MATERIALS AND CONSTRUCTION OF THIS STRUCTURE SHALL BE IN ACCORDANCE WITH THE STANDARD SPECIFICATION FOR CONSTRUCTION OF ROADS AND BRIDGES ON FEDERAL HIGHWAY PROJECTS (FP-03) AND STANDARD SPECIFICATIONS FOR CONSTRUCTION OF TRAILS AND TRAIL BRIDGES ON FEDERAL PROJECTS,

CONCRETE: USE STRUCTURAL CONCRETE WITH 7 SACK MINIMUM MIX APPROVED BY THE C.O., CONCRETE SHALL RECEIVE A TOWELED SURFACE FINISH. CONCRETE SHALL HAVE 4%-6% ENTRAINED AIR. MAXIMUM SIZE AGGREGATE SHALL BE 3/4-INCH AND CONCRETE SLUMP SHALL NOT EXCEED 4-INCHES.

REINFORCING STEEL: PROVIDE REINFORCING STEEL THAT CONFORMS TO ASTM A615 (AASHTO M31), GRADE 40 OR 60. PROVIDE 2-INCH CLEAR CONCRETE COVER FOR ALL REBAR, UNLESS NOTED OTHERWISE ON THE PLANS.

HARDWARE AND STRUCTURAL STEEL: SEE SHEET 3 FOR PROJECT DESIGN CRITERIA AND GENERAL NOTES.

TREATED TIMBER & LUMBER: REFER TO THE GENERAL NOTES ON THE SUBSTRUCTURE DRAWINGS FOR TREATED TIMBER & LUMBER SPECIFICATIONS AND FIELD TREATING OF WOOD

LAG SCREW INSTALLATION: PRE-BORE LAG SCREW HOLES USING TWO DIAMETERS, ONE FOR THE SHANK AND ONE FOR THE THREADS. THE LEAD HOLE FOR THE SHANK IS TO BE 1/16-INCH LARGER THAN THE SHANK DIAMETER AND IS TO BE BORED TO THE DEPTH OF PENETRATION OF THE SHANK. THE LEAD HOLE FOR THE THREADED PORTION IS TO BE 70% OF THE BOLT DIAMETER AS SHOWN ON THE PLANS AND IS TO BE BORED AT LEAST TO THE LENGTH OF THE THREADS. **DO NOT DRIVE LAG SCREWS WITH A HAMMER.**

U.S. DEPARTMENT OF AGRICULTURE
FOREST SERVICE
STANDARD TRAIL PLAN

PROJECT NAME & LOCATION

DRAWING NAME
SAWN TIMBER STRINGER TRAIL BRIDGE

SECTION
962 - SAWN TIMBER TRAIL BRIDGE

TYPICAL ID
STS

REVISION DATE

NOT TO SCALE

DRAWING NO.
STD_962-10-04

SHEET
OF

C

Design Guidelines

Description

The design development guidelines featured in this Appendix have been tailored to meet the specific facility development needs of the Wake County Consolidated Open Space System. The purpose of these guidelines is to assist the County and its municipalities and partnering organizations in developing open space and greenway facilities.

These guidelines provide a variety of trail facility and ecological system restoration concepts and ideas. These guidelines are not a substitute for a more thorough examination and detailed landscape architectural and engineering evaluation of each project segment. These guidelines serve as minimum standards for greenway facility development. Wake County disclaims any liability for the use, appropriateness and accuracy of these guidelines as they apply to a specific project. They are not to be used for construction.

The following resource materials have been used in the preparation of these guidelines:

- Adherence to national design standards for off-road trails and greenway facilities, as defined by the American Association of State Highway Transportation Officials (AASHTO), the Americans with Disabilities Act (ADA), Designing Sidewalks and Trails for Access: Part 2 and the Manual on Uniform Traffic Control Devices.

Resources

For more in-depth information and design development standards, the following publications should be consulted:

<u>Greenways: A Guide to Planning, Design and Development</u>
Published by Island Press, 1993
Authors: Charles A. Flink and Robert Searns
For more information visit www.greenways.com

<u>Trails for the Twenty-First Century</u>
Published by Island Press, 2001
Authors: Charles A. Flink, Robert Searns and Kristine Olka
For more information visit www.greenways.com

Additional Resources

Guide to the Development of Bicycle Facilities
Updated in 2000 by the American Association of State Highway Transportation Officials (AASHTO). Available from FHWA or AASHTO. www.aashto.org/bookstore/abs.html

Manual on Uniform Traffic Control Devices (MUTCD)
Published by the U. S. Department of Transportation, Washington, DC

Universal Access to Outdoor Recreation: A Design Guide
Published by PLAE, Inc., Berkeley, CA, 1993

Designing Sidewalks and Trails for Access: Part Two - Best Practices Design Guide
Published by U.S. Department of Transportation, Washington, DC, 2001

In all cases, the recommended guidelines in this report meet or exceed national standards. Should these national standards be revised in the future and result in discrepancies with this chapter, the national standards should prevail for all design decisions.

Other useful web sites for information include:

Rails-to-Trails Conservancy - www.railtrails.org
National Park Service - www.nps.org
U.S. Department of Transportation - www.walkinginfo.org and www.bicyclinginfo.org
Trails and Greenways Clearinghouse - www.trailsandgreenways.org
National Bicycle and Pedestrian Clearinghouse - www.bikefed.org/clear.htm
Greenways Incorporated - www.greenways.com

Stream Corridor Buffer

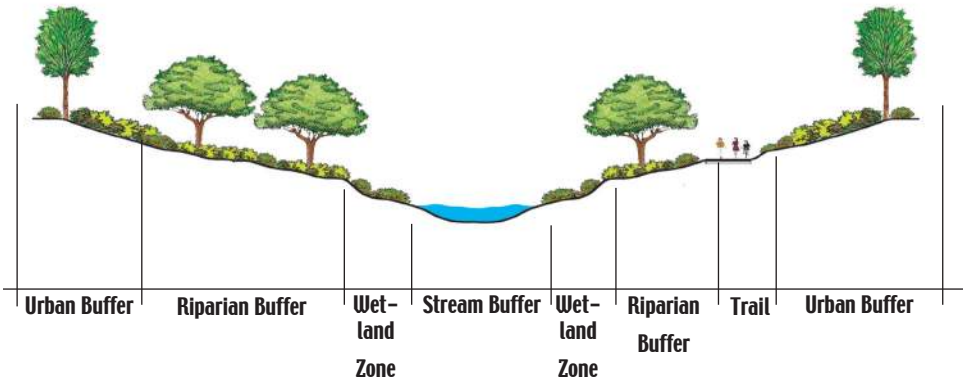

Riparian buffers serve many functions. They filter stormwater pollutants, help moderate stream flow, stabilize streambanks, moderate stream temperature, and provide aquatic and terrestrial habitat. The Neuse Nutrient Sensitive Waters (NSW) rules require that new developments maintain an existing 50-foot vegetated buffer on both sides of all intermittent and perennial streams, lakes and ponds within the Neuse River Basin. Approximately 85 percent of Wake County lies within the Neuse River Basin. For the purpose of the rules, a waterbody exists if the feature is present on either the most recent version of the soil map or 7.5 minute quadrangle topographic map prepared by United States Geographical Systems (USGS). The required buffers consist of two zones: a 30-foot undisturbed zone adjacent to each side of the waterbody, and a vegetated zone that extends from the outer edge of the 30 foot zone for a distance of at least 20 feet.

Buffers are required in water supply watersheds throughout the state as part of the Water Supply Watershed Management Program. The Division of Water Quality manages the program through oversight of local ordinances and monitoring of land use activities. Local water supply watershed programs must be approved by the NC Environmental Management Commission (EMC). The program requires local governments to adopt land use controls that include buffer protection. For low-density development, 30-foot buffers are required along perennial streams, and 100-foot buffers are required for high-density development. There are five major water supply watersheds within Wake County: Falls Lake, Jordan Lake, Wake Forest Reservoir, Swift Creek, and Little River. In addition, a small portion of the County near Fuquay-Varina drains to the Cape Fear River, which is used as a water supply by Lillington.

Stream buffers within Wake County should be established to protect water quality and animal habitat. For the purpose of greenway facility development, a minimum of 50-feet wide buffer (150-feet preferred) as measured from the top of streambank is required in order to mitigate the damaging effects of flooding from storms, filter pollutants from overland flow and develop appropriately sized greenway trail facilities.

Wake County has applied the Neuse River Basin 50-foot buffer throughout the county. (See the attached Neuse River Buffer Rules.) Some of the municipalities within the county (Garner, Apex, Cary and Morrisville) have placed additional buffers up to 100-feet on their streams, according to each stream's order.

Instead of using this conventional method of prescriptive buffers, stream buffers should be a varied width according to ecological features of the watershed. Each buffer width will be site specific, depending on the following characteristics of the stream, riparian buffer and watershed:

- Slope
- Soil
- Hydrology
- Vegetation
- Water Quality
- Impervious Surface

The appropriate width for a variety of characteristic combinations will be discussed more in depth in the Wake County Consolidated Open Space and Greenways Plan.

Corridor Planting

Some basic guides for planting in corridors is as follows:

- Efforts should be made to eliminate non-native invasive species, such as privet, from corridors.
- Native overstory and understory trees/shrubs should be replanted where vegetation is removed or harmed due to construction of parks, trails, etc. in greenway corridors or open space.
- Fallen trees should not be removed unless they obstruct trails or present danger. Otherwise, they should be left to decay naturally.
- Evergreens, conifers (pines) and deciduous trees should all be used proportionally.
- Mast producing trees and shrubs with berries should be utilized for wildlife food whenever possible.
- Flowering trees and shrubs can be used to draw attention to important intersections and entrances.
- Evergreen shade trees are needed near seating areas and picnic tables.
- Evergreen shrubs, such as wax myrtle, can help separate public

Types of Trail Treads

One of the following types of trail treads should be used when designing greenway trails and sidewalks. The appropriate trail type will depend on the specific site conditions of the trail segment. Some of the characteristics of the trail corridor to consider are soil type, vegetation cover, flooding, slope and wildlife habitat sensitivity, among others.

Creekside Trail Tread

Creekside trails are located only in urban areas, where right-of-way constraints and channelized streams restrict trail development to the floodway. Creekside trails are designed to accommodate walkers, bicyclists, rollerbladers, and joggers. These multi-use trails are typically positioned directly adjacent to the stream channel and are therefore subject to frequent flooding. These trails require hard-paved surfaces of concrete to withstand high-velocity stream flows. Retaining walls or other structural elements may also be required for stable construction and to protect the trail from erosion and flood damage.

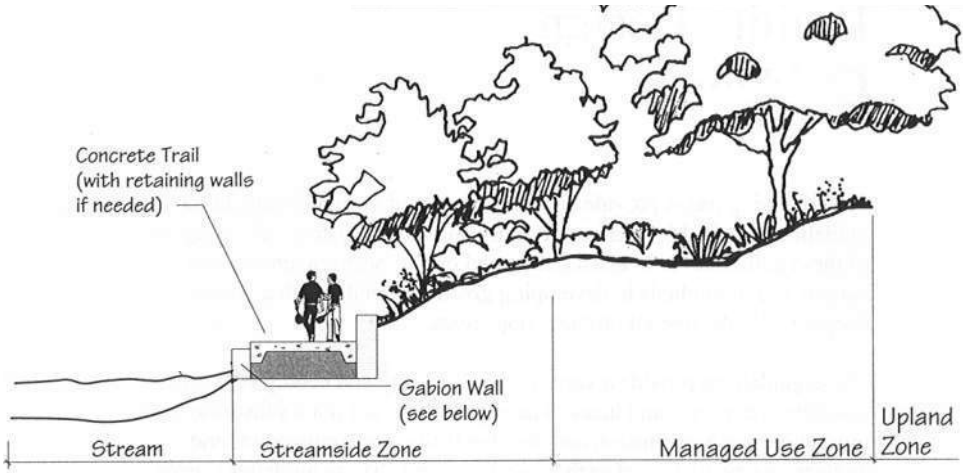

Typical Multi-Use Creekside Trail Cross Section

Creekside trails should be a minimum of 10'-wide for multi-use trails. The installation of railings, benches, signage, and trash receptacles that could obstruct flow during storm events, should be carefully considered. Creekside trails must be designed and installed in a manner that minimizes their effect on flood waters and protects the amenities from flood damage. The use of retaining walls as seat walls is one way in which non-obtrusive amenities can be included on this type of trail facility. Special consideration should be paid to mitigating the impacts of trail construction on the natural environment.

Floodway Trail Tread

Multi-use trails within the floodway are designed to accommodate a variety of users including walkers, joggers, cyclists, and rollerbladers. These multi-use trails are typically positioned within the floodway but not directly adjacent to streams. Some vegetative buffer between the stream and trail should be left intact. Like the streamside trails, trails within the floodway are subject to periodic flooding, however, not as frequently. These trails require paved surfaces of either asphalt or concrete depending on frequency of flooding and expected velocity of flow. A proper trail foundation is important and will increase the longevity of the trail. No soft shoulder should be constructed due to flood considerations. Special consideration should be given to the mitigation of negative impacts from trail development on the natural stream environment.

Multi-use trails within the floodway should be built with a minimum width of 10 feet. All elements of the trail including the trail tread, railings, benches, and trash receptacles will be periodically flooded. The design and materials for these trails should be carefully selected accordingly.

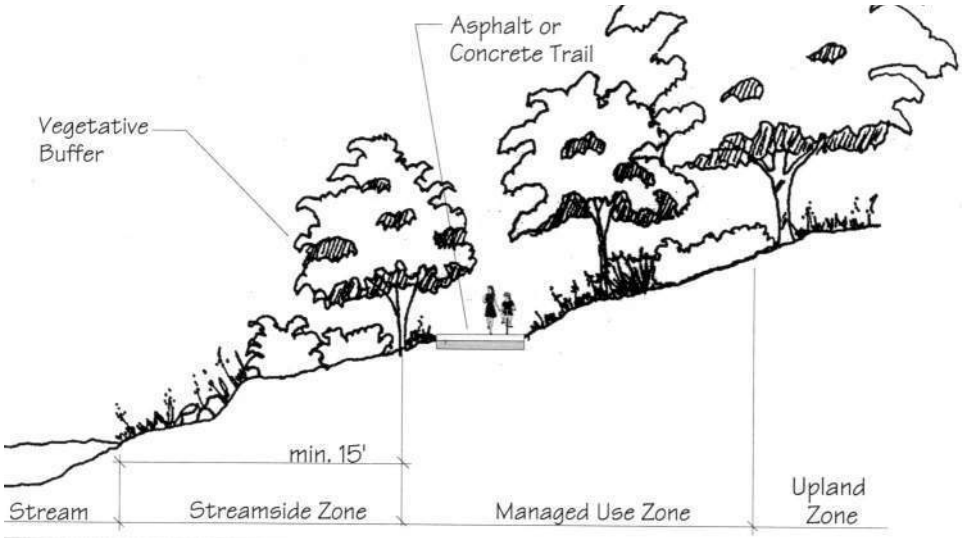

Typical Multi-Use Trail Cross Section (Within the Floodway)

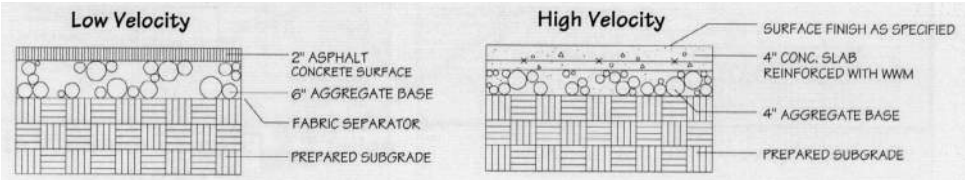

Asphalt Paving on Aggregate Base Concrete Paving on Aggregate Base

Paving Cross Section

Floodplain Trail Tread

Multi-use trails within the floodplain are designed to accommodate a variety of users including walkers, joggers, cyclists, and in-line skaters. These multi-use trails are typically positioned outside the floodway but within the floodplain. Significant vegetative buffers between the stream and trail should be left intact. Multi-use trails within the floodplain are subject to occasional flooding during large storm events. It is recommended that these trails be built with paved asphalt, however an aggregate stone surface may be adequate in some locations.

Multi-use trails within the floodplain should be built to a minimum width of 10', although12' to 14' is preferred. The graphics below illustrate two suitable pavement cross sections that can be used to build multi-use trails within the floodplain.

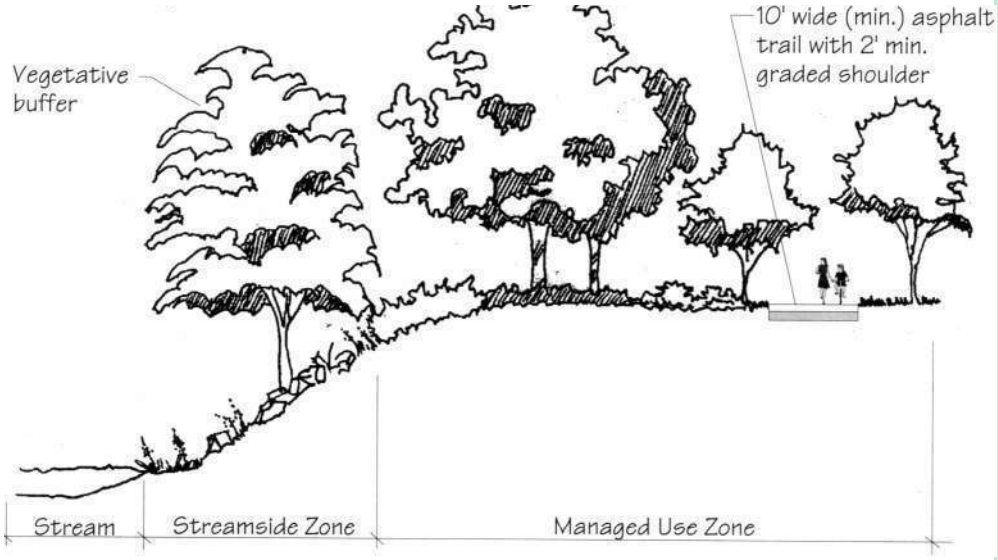

Typical Multi-Use Trail Cross Section (Within the Floodplain)

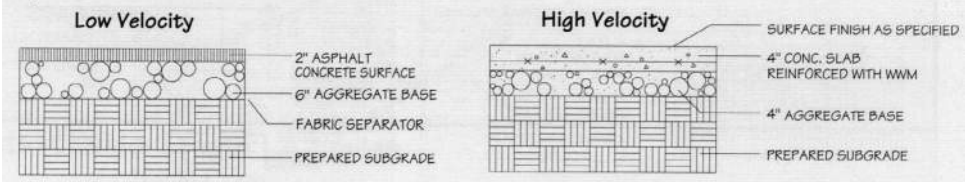

Asphalt Paving on Aggregate Base Gravel Paving on Aggregate Base

Paving Cross Section

Upland Trail Tread

Upland multi-use trails are designed to accommodate a variety of users including walkers, joggers, cyclists and in-line skaters. These upland multi-use trails are typically positioned completely outside designated floodplains. Significant vegetative buffer between any streams and the trail should be left intact. It is recommended that these trails be built with paved asphalt or aggregate stone, depending on the preference of local user groups. Upland multi-use trails should be built to a minimum width of 10', though 12' is preferred.

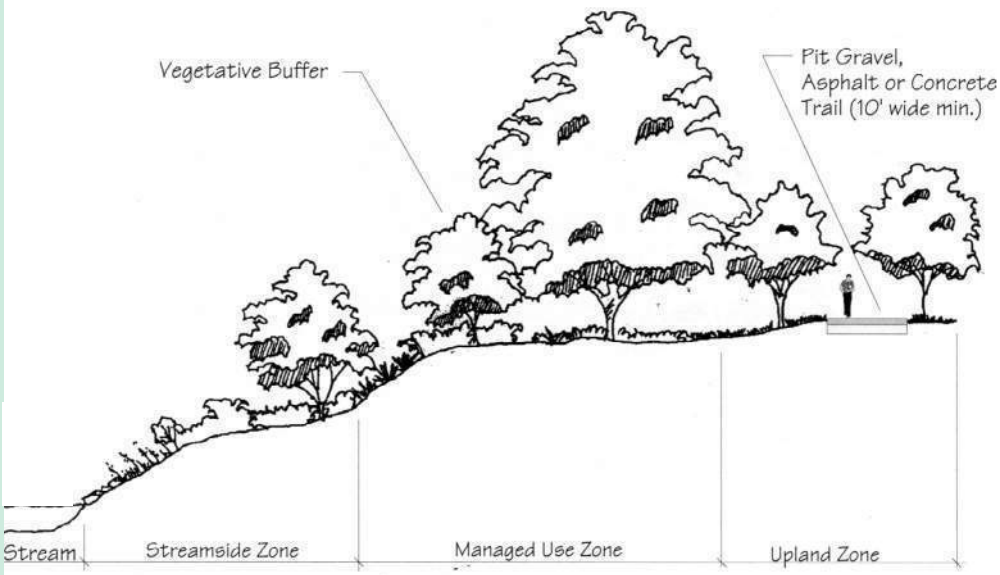

Upland Trail Cross Section

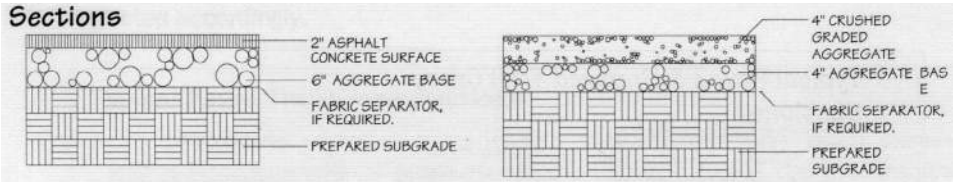

Asphalt Paving on Aggregate Base Gravel Paving on Aggregate Base

Paving Cross Section

Footpath/Hiking Trail

Footpaths or hiking trails are designed to accommodate pedestrians and are not intended for cyclists or other wheeled users. These natural surface trails typically make use of dirt, rock, soil, forest litter, pine mulch and other native materials for the trail surface. Preparation varies from machine-worked surfaces to those worn only by usage. This is the most appropriate surface for ecologically sensitive areas.

Footpath Cross Section

These pathways, often very narrow, sometimes follow strenuous routes and may limit access to all but skilled users. Construction of these trails mainly consists of providing positive drainage for the trail tread and should not involve extensive removal of existing vegetation. Timbers may be used for steps along steep slopes. These trails vary in width from 3 feet to 6 feet and vertical clearance should be maintained at 9 feet. These trails are most commonly found within the streamside zone.

Boardwalk Trail Tread

Boardwalks, or wood surface trails, are typically required when crossing wetlands or poorly-drained areas. While boardwalks can be considered multi-use trails, the surface tends to be slippery when wet and not best suited for wheeled users. Boardwalks intended for use by bikes, pedestrians, in-line skaters and others should be a minimum of 14 feet wide. However, boardwalk trails limited to pedestrian use can be as narrow as 8 feet. If maintenance vehicles use the boardwalk for access, it should be a minimum of 14 feet.

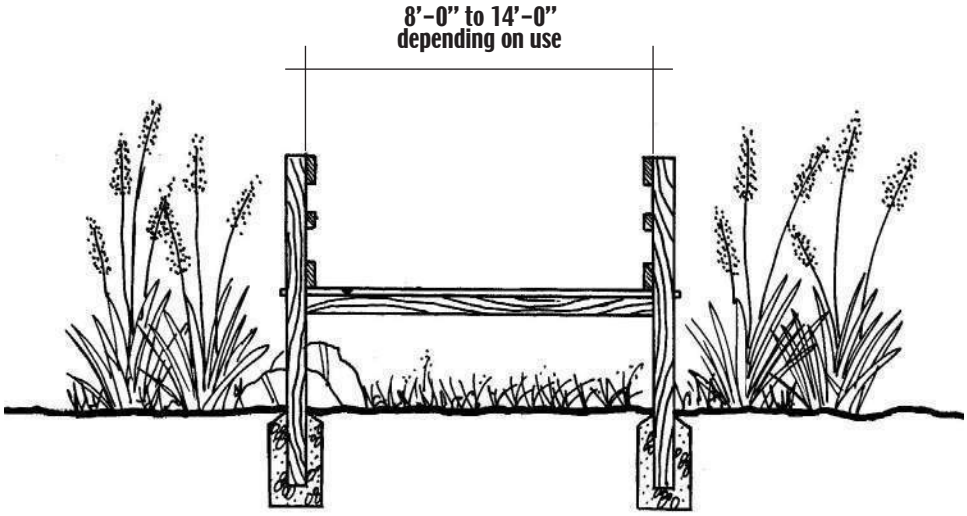

Boardwalk Cross Section

Wood surfaced trails are usually composed of sawn wooden planks or lumber that forms the top layer of a bridge, boardwalk or deck. The most commonly used woods for trail surfacing are exposure- and decay- resistant species such as pine, redwood, fir, larch, cedar, hemlock and spruce. Wood is a preferred surface type for special applications because of its strength and comparative weight, its aesthetic appeal and its versatility. Synthetic wood, manufactured from recycled plastics, is now available for use as a substitute in conventional outdoor wood construction. While these products are more expensive than wood lumber, recycled plastic lumber lasts much longer, does not splinter or warp and will not discolor.

Paved Multi-Use Trail

Typical pavement design for paved, off-road, multi-use trails should be based upon the specific loading and soil conditions for each project. These trails, typically composed of asphalt or concrete, should be designed to withstand the loading requirements of occasional maintenance and emergency vehicles. In areas prone to frequent flooding, it is recommended that concrete be used because of its excellent durability.

One important concern for asphalt, multi-use trails is the deterioration of trail edges. Installation of a geotextile fabric beneath a layer of aggregate base course (ABC) can help to maintain the edge of a trail. It is important to provide a 2'- wide graded shoulder to prevent trail edges from crumbling.

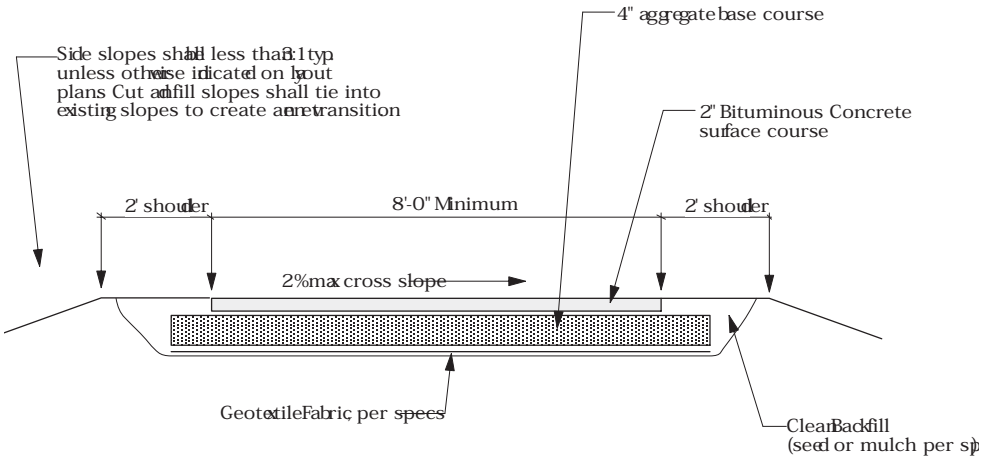

Multi-Use Trail Cross Section

The minimum width for two-directional trails is 10', however 12'-14' widths are preferred where heavy traffic is expected. Centerline stripes should be considered for paths that generate substantial amounts of pedestrian traffic. Possible conflicts between user groups must be considered during the design phase, as cyclists often travel at a faster speed than other users. Radii minimums should also be considered depending on the different user groups.

Asphalt is a hard surface material that is popular for a variety of rural, suburban and urban trails. It is composed of asphalt cement and graded aggregate stone. It is a flexible pavement and can be installed on virtually any slope.

Concrete surfaces are capable of withstanding the most powerful environmental forces. They hold up well against the erosive action of water, root intrusion and subgrade deficiencies such as soft soils. Most often, concrete is used for intensive urban applications. Of all surface types, it is the strongest and has the lowest maintenance requirement, if it is properly installed.